EROSION & SEDIMENTATION CONTROL PLAN
FOR
283 COMMERCE CENTER - BUILDING #1
FOR
PDC NORTHEAST LPIV, LLC
MOUNT JOY TOWNSHIP
LANCASTER COUNTY, PENNSYLVANIA
JANUARY 04, 2023

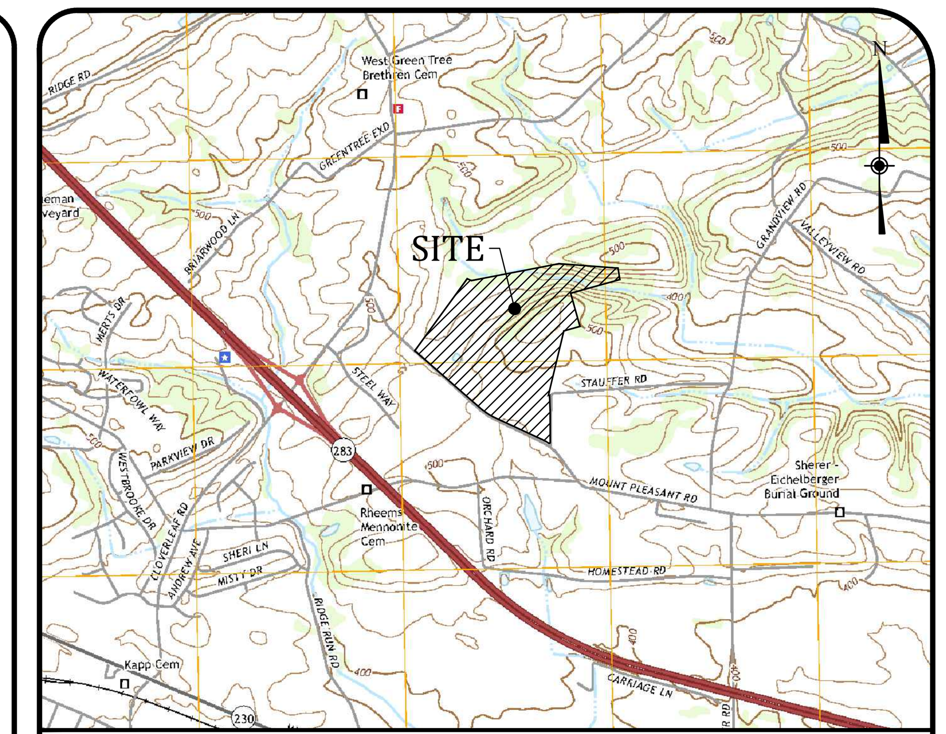

LOCATION MAP
SCALE: 1" = 2000'

UNIFORM PARCEL IDENTIFIER
#461-89922-0

INDEX OF DRAWINGS

SHEET NO.	TITLE
C-100	COVER SHEET
C-200	OVERALL EXISTING CONDITIONS PLAN
C-201 - C-205	DEMOLITION PLAN
C-1100	OVERALL EROSION & SEDIMENTATION CONTROL PLAN - PHASE I
C-1101 - C-1105	EROSION & SEDIMENTATION CONTROL PLAN - PHASE I
C-1200	OVERALL EROSION & SEDIMENTATION CONTROL PLAN - PHASE II
C-1201 - C-1205	EROSION & SEDIMENTATION CONTROL PLAN - PHASE II
C-1301 - C-1305	EROSION & SEDIMENTATION CONTROL DETAILS
24 SHEETS IN SET	

ENGINEER'S CERTIFICATION

I, JOSHUA C. GEORGE, P.E., A REGISTERED PROFESSIONAL ENGINEER OF THE COMMONWEALTH OF PENNSYLVANIA, HEREBY CERTIFY THAT, TO THE BEST OF MY KNOWLEDGE, THIS PLAN IS ACCURATE AND CORRECT AS INDICATED.

01/04/23

JOSHUA C. GEORGE, P.E. REG. NO. 056897-E

COMMONWEALTH OF PENNSYLVANIA REGISTERED PROFESSIONAL ENGINEER JOSHUA C. GEORGE PE-056897-E

APPLICANT

PDC NORTHEAST LPIV, LLC
6059 ALLENTOWN BLVD SUITE 127
HARRISBURG, PA 17112
(717) 649-9588
ATTN: JOE PETERS

OWNER

FRANKLIN B. GREINER JR.
700 CORNWALL MOUNTAIN ROAD
LITITZ, PA 17543

LIST OF UTILITIES

SERIAL NUMBER - [20221612420]-[000] & [20213161628]-[000]

COMPANY: COMCAST
ADDRESS: 339 BALTIMORE RD
SHIPPENSBURG, PA. 17257
CONTACT: WILLIAM MAYS
EMAIL: william_mays@cable.comcast.com

COMPANY: FIRST ENERGY PENELEC
ADDRESS: 21 S MAIN ST
AKRON, OH. 44308
CONTACT: CARA WARREN
EMAIL: CARAWARREN@FIRSTENERGYCORP.COM

COMPANY: VERIZON BUSINESS FORMERLY MCI
ADDRESS: 400 INTERNATIONAL PARKWAY
RICHARDSON, TX. 75081
CONTACT: DEAN BOYERS
EMAIL: investigations@verizon.com

COMPANY: MOUNT JOY TOWNSHIP LANCASTER COUNTY
ADDRESS: 8853 ELIZABETHTOWN RD
ELIZABETHTOWN, PA. 17022
CONTACT: KEN EBERSOLE
EMAIL: KEN@MTJOYTWP.ORG

COMPANY: PPL ELECTRIC UTILITIES CORPORATION
ADDRESS: 434 SUSQUEHANNA TRAIL
NORTHUMBERLAND, PA. 17857
CONTACT: DOUG HAUPT
EMAIL: dlhaupt@pplweb.com

COMPANY: LUMEN/CENTURYLINK
ADDRESS: 200 TECHNOLOGY DRIVE
PITTSBURGH, PA. 15219
CONTACT: DAN SHENTO
EMAIL: DAN.SHENTO@LUMEN.COM

COMPANY: UGI UTILITIES INC
ADDRESS: 1301 AIP DR
MIDDLETOWN, PA. 17057
CONTACT: STEPHEN BATEMAN
EMAIL: sbateman@ugi.com

COMPANY: ELIZABETHTOWN AREA WATER AUTHORITY
ADDRESS: 211 W HUMMELSTOWN STREET
ELIZABETHTOWN, PA. 17022
CONTACT: DEL BECKER

COMPANY: ELIZABETHTOWN REGIONAL SEWER AUTHORITY
ADDRESS: 235 ERSA DR
ELIZABETHTOWN, PA. 17022
CONTACT: STEVEN RETTEW
EMAIL: steve@ersapa.com

COMPANY: MET ED FIRSTENERGY
ADDRESS: 2800 POTTSVILLE PIKE
READING, PA. 19605
CONTACT: PETE HACHEM
EMAIL: PHACHEM@FIRSTENERGYCORP.COM

ACT 287

LANDWORKS CIVIL DESIGN, LLC HEREBY STATES THAT, PURSUANT TO THE PROVISIONS OF ACT 287 OF 1974, OF THE PENNSYLVANIA LEGISLATURE, IT HAS PERFORMED THE FOLLOWING IN PREPARING THESE DRAWINGS REQUIRING EXCAVATION OR DEMOLITION WORK AT SITES WITHIN THE POLITICAL SUBDIVISION(S) SHOWN ON THESE DRAWINGS:

1. PURSUANT TO SECTION 4, CLAUSE (2) OF SAID ACT, LANDWORKS CIVIL DESIGN, LLC REQUESTED FROM EACH USER'S OFFICE DESIGNATED ON SUCH LIST PROVIDED BY THE ONE CALL SYSTEM NOTIFICATION, THE INFORMATION PRESCRIBED BY SECTION 2, CLAUSE (4) OF SAID ACT, NOT LESS THAN (10) NOR MORE THAN (90) WORKING DAYS BEFORE FINAL DESIGN IS TO BE COMPLETED.
2. PURSUANT TO SECTION 4, CLAUSE (5) OF SAID ACT, LANDWORKS CIVIL DESIGN, LLC HAS MET THEIR OBLIGATIONS OF CLAUSE (2) BY CALLING THE ONE CALL SYSTEM SERVING THE LOCATION WHERE EXCAVATION IS TO BE PERFORMED.
3. PURSUANT TO SECTION 4, CLAUSE (3) OF SAID ACT, LANDWORKS CIVIL DESIGN, LLC HAS SHOWN UPON THESE DRAWINGS "THE POSITION AND TYPE OF EACH LINE, AS DERIVED PURSUANT TO THE REQUEST MADE AS REQUIRED BY CLAUSE (2), THE SERIAL NUMBER PROVIDED BY THE ONE CALL SYSTEM, THE TOLL-FREE ONE CALL SYSTEM PHONE NUMBER, AND THE NAME OF THE USER, THE USER'S DESIGNATED OFFICE ADDRESS AND PHONE NUMBER AS SHOWN ON THE LIST REFERRED TO IN SECTION 4, CLAUSE (5) OF SAID ACT."

AND LANDWORKS CIVIL DESIGN, LLC DOES NOT MAKE ANY REPRESENTATION, WARRANTY, ASSURANCE OR GUARANTEE THAT THE INFORMATION RECEIVED PURSUANT TO SAID REQUEST AND AS REFLECTED ON THESE DRAWINGS IS CORRECT OR ACCURATE, BUT LANDWORKS CIVIL DESIGN, LLC IS REFLECTING SAID INFORMATION ON THESE DRAWINGS ONLY DUE TO THE REQUIREMENTS OF THE SAID ACT NO. 181 OF 2006.

ONE CALL SYSTEM SERIAL NO. NOTIFICATION:

DATE: 2022

ONE CALL SYSTEM SERIAL NUMBER: #20221612420 & #20213161628

PENNSYLVANIA ONE CALL SYSTEM, INC. 1-800-242-1776 STOP-CALL BEFORE YOU DIG!

CALL BEFORE YOU DIG
PENNSYLVANIA LAW REQUIRES (3) WORKING DAYS NOTICE FOR CONSTRUCTION PHASE AND (10) WORKING DAYS IN DESIGN STAGE - STOP CALL

PROJECT NAME
283 COMMERCE CENTER - BUILDING #1

PROJECT NO.
22-0123-005 | **C-100**

LANDWORKS CIVIL DESIGN, LLC
land development consultants
LAND SURVEYING · LAND PLANNING · CIVIL ENGINEERING
1195 VIRGINIA AVENUE YORK, PA 17403
p (717) 891-1195 www.landworkscd.com

DRAWING REFERENCE: L:\Projects\22\22-0123-005\CADD\Plan Sheets\EnS\22-0123-005-01-EnS Cover Sheet.dwg
PRINTED: 1/04/2023, 8:27AM Tim Fink
XREFS:

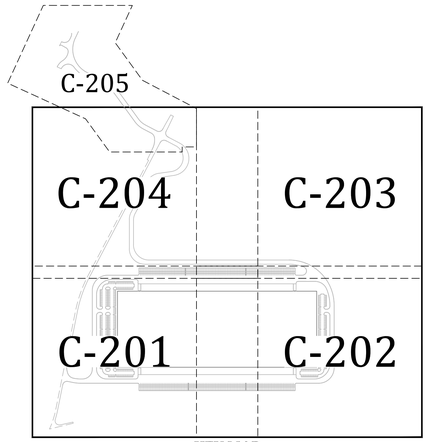

KEY MAP
SCALE: 1" = 500'

LEGEND

- EXISTING BOUNDARY LINE
- EXISTING ADJOINER BOUNDARY LINE
- EXISTING RIGHT-OF-WAY LINE
- EXISTING CURB
- EXISTING PAVEMENT
- EXISTING CONTOUR LINE
- EXISTING STREAM
- MUNICIPAL BOUNDARY LINE
- EXISTING GRAVEL DRIVE
- EXISTING VEGETATION
- EXISTING TREELINE
- EXISTING FENCE
- EXISTING OVERHEAD ELECTRIC LINE
- EXISTING UNDERGROUND ELECTRIC LINE
- EXISTING GUIDE RAIL
- EXISTING WETLANDS
- EXISTING UTILITY POLE
- EXISTING WATER VALVE
- EXISTING FIRE HYDRANT
- EXISTING WATER LINE
- EXISTING SANITARY SEWER MANHOLE
- EXISTING SANITARY SEWER LINE
- EXISTING STORM MANHOLE
- EXISTING STORM INLET
- EXISTING STORM PIPE
- EXISTING ELECTRIC TRANSFORMER
- EXISTING ELECTRIC MANHOLE
- EXISTING COMMUNICATIONS MANHOLE
- EXISTING CABLE TV BOX
- EXISTING GAS METER
- EXISTING GAS MANHOLE
- EXISTING TELEPHONE BOX
- EXISTING WATER METER PIT
- EXISTING WATER MANHOLE
- EXISTING WELL
- EXISTING LIGHT STANDARD

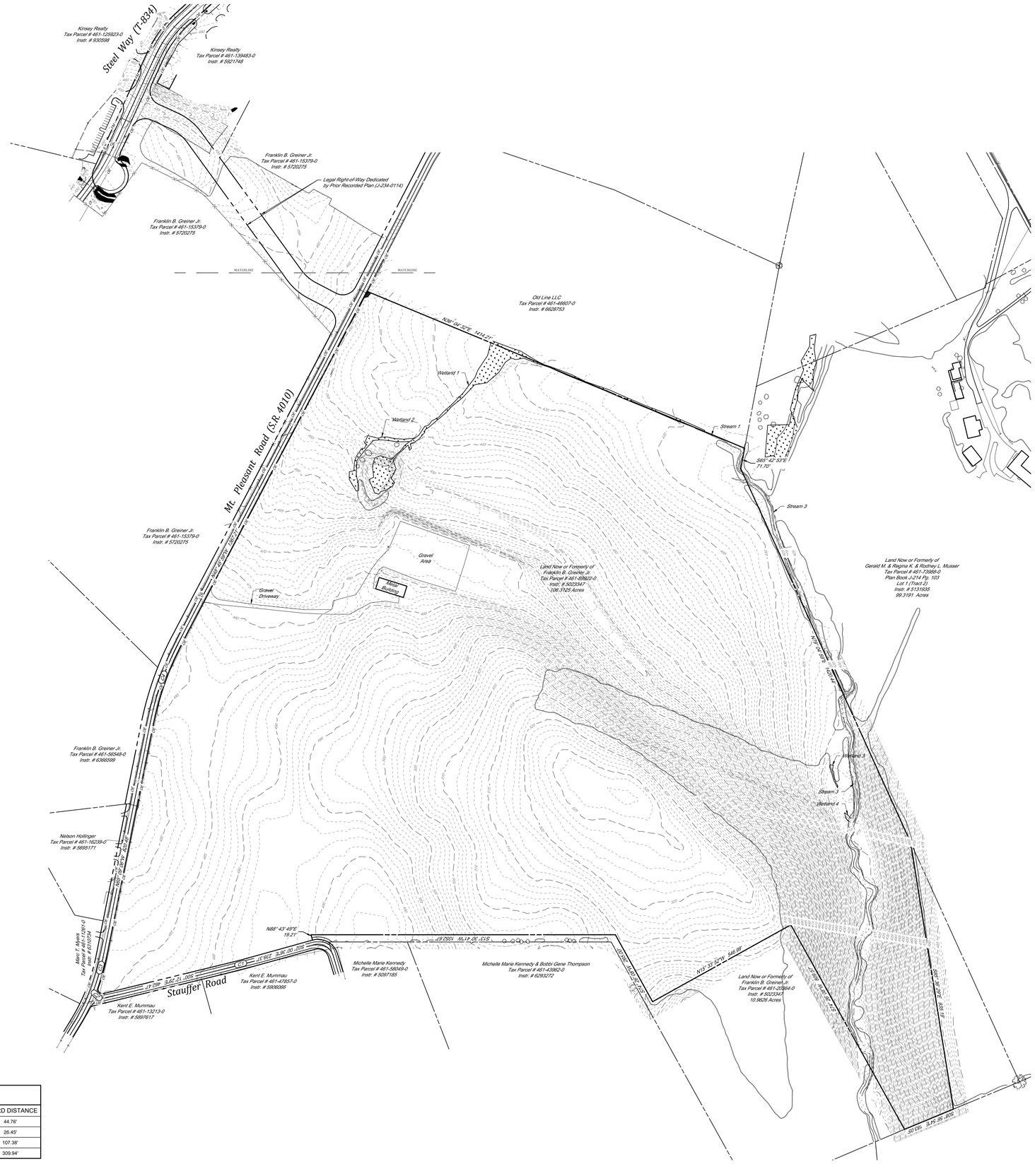

CURVE TABLE

CURVE #	LENGTH	RADIUS	CHORD BEARING	CHORD DISTANCE
C1	44.76'	1423.50'	S 01°06'32" E	44.76'
C2	32.38'	15.00'	S 61°38'31" W	26.45'
C3	107.49'	712.50'	S 60°49'48" E	107.38'
C4	311.00'	1087.50'	N 56°57'33" W	309.94'

GRAPHIC SCALE
150' 75' 0' 150'
SCALE: 1" = 150'

PROJ. MGR. -	JJB
DESIGN -	TBF
CADD -	TBF
CHECKED -	JJB

NO.	DATE	REVISION	BY

LANDWORKS
CIVIL DESIGN, LLC
land development consultants
1195 VIRGINIA AVENUE
P: (717) 854-1195
YORK, PA 17403
www.landworksdesign.com

OVERALL EXISTING CONDITIONS PLAN
FOR
283 COMMERCE CENTER - BUILDING #1
FOR
PDC NORTHEAST LP/IV, LLC
MOUNT JOY TOWNSHIP
LANCASTER COUNTY, PENNSYLVANIA

PROJECT NO. 22-0123-005
DATE: 01/03/23
SCALE: 1" = 150'
SHEET 3 OF 54
C-200

DRAWING REFERENCE: G:\Projects\2022\22-0123-005 - Commerce Center - Building 1\Dwg\C-200 Overall Existing Conditions Plan.dwg
PRINTED: Tuesday, 3/22/2022 1:14 PM
XREF'S: 22-0123-005_BASE(1) - Drawing Space(C-200 Existing Conditions Plan.dwg)
22-0123-005_BASE(2) - Drawing Space(C-200 Existing Conditions Plan.dwg)
22-0123-005-Xref(1) - Drawing Space(C-200 Existing Conditions Plan.dwg)
22-0123-005-Xref(2) - Drawing Space(C-200 Existing Conditions Plan.dwg)

KEY MAP
SCALE: 1" = 500'

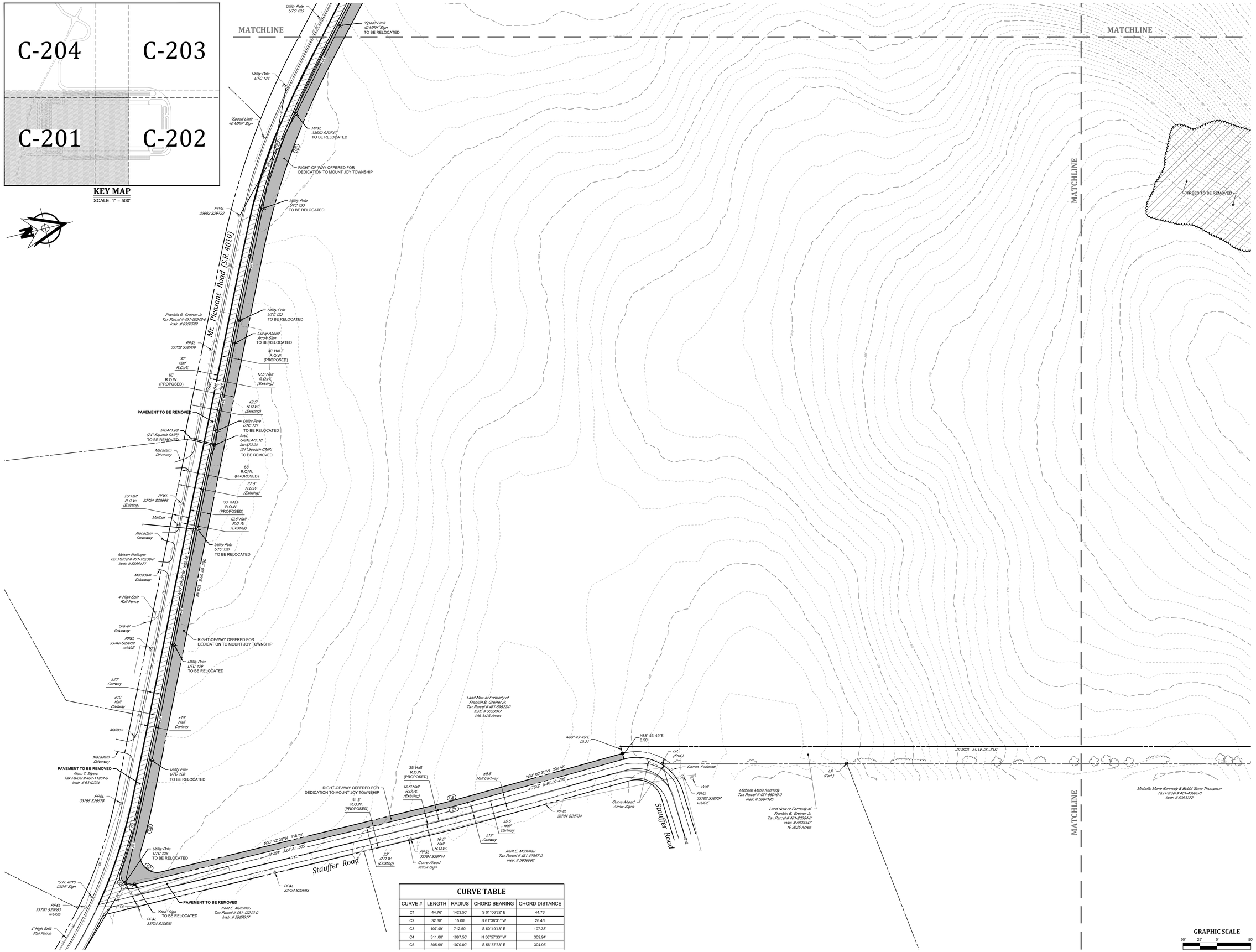

CURVE TABLE

CURVE #	LENGTH	RADIUS	CHORD BEARING	CHORD DISTANCE
C1	44.76'	1423.50'	S 01°06'32" E	44.76'
C2	32.38'	15.00'	S 61°38'31" W	26.45'
C3	107.49'	712.50'	S 60°49'48" E	107.38'
C4	311.00'	1087.50'	N 56°57'33" W	309.94'
C5	305.99'	1070.00'	S 56°57'33" E	304.95'

PROJ. MGR. -	JJB
DESIGN -	TBF
CADD -	TBF
CHECKED -	JJB

NO.	DATE	REVISION	BY

LANDWORKS
CIVIL DESIGN, LLC
land development consultants
1155 VIRGINIA AVENUE
P: (717) 854-1155
YORK, PA 17403
www.landworksdesign.com

DEMOLITION PLAN
FOR
283 COMMERCE CENTER - BUILDING #1
FOR
PDC NORTHEAST LPIV, LLC
MOUNT JOY TOWNSHIP
LANCASTER COUNTY, PENNSYLVANIA

PROJECT NO. 22-0123-005
DATE: 01/03/23
SCALE: 1" = 50'
SHEET 4 OF 54
C-201

DRAWING REFERENCE: L:\Projects\2022\22-0123-005 ADD\Plan Sheets\Fire\22-0123-005-03-Demolition Plan.dwg
PRINTED: 1/4/2023, 9:27AM Tom Fritz

XREF: 22-0123-005_Base | L:\Drawing Sheets\22-0123-005_Base.dwg; 22-0123-005-Header | L:\Drawing Sheets\22-0123-005-Header.dwg; 22-0123-005-Header2 | L:\Drawing Sheets\22-0123-005-Header2.dwg; 22-0123-005-Header3 | L:\Drawing Sheets\22-0123-005-Header3.dwg; 22-0123-005-Legend | L:\Drawing Sheets\22-0123-005-Legend.dwg

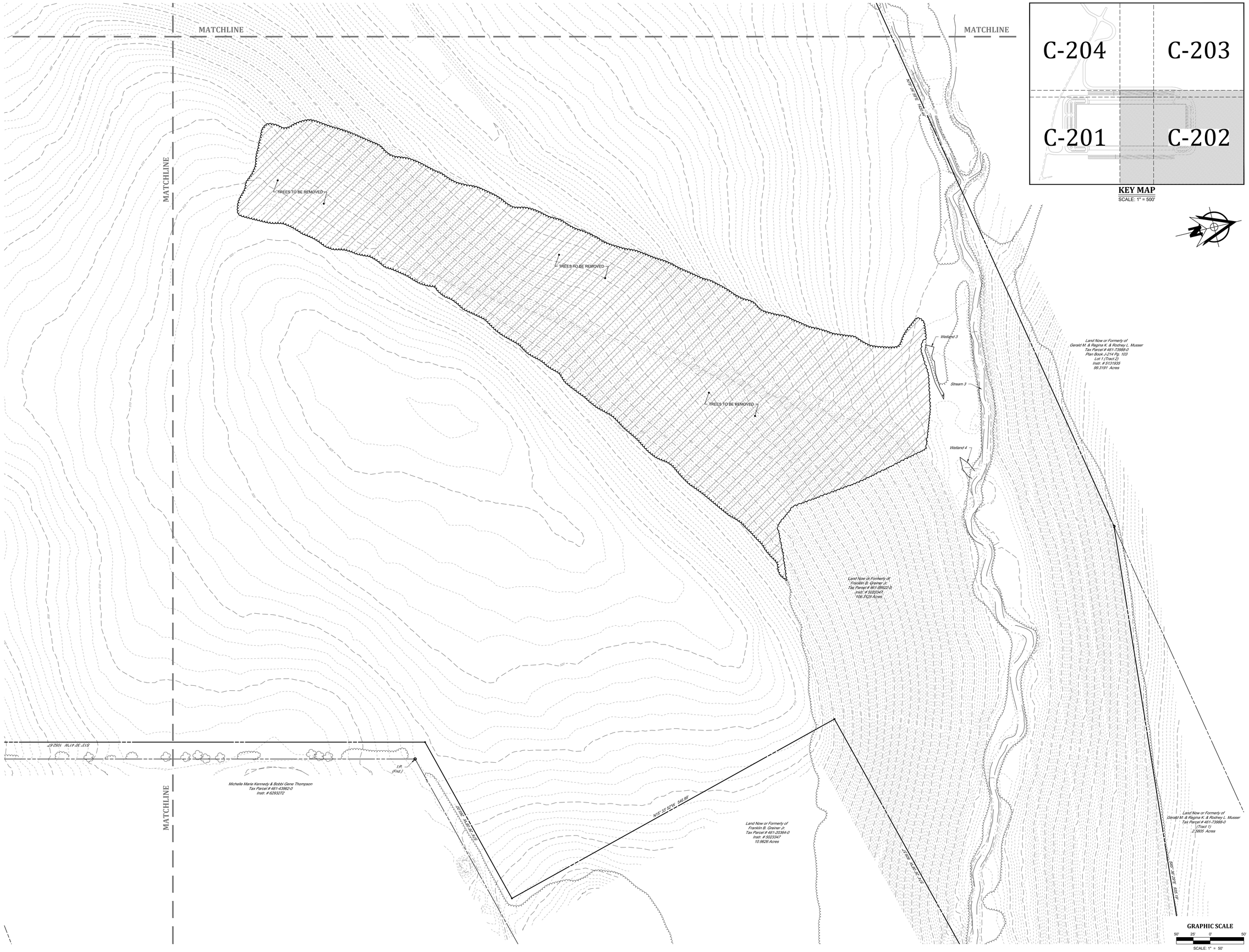

KEY MAP
SCALE: 1" = 500'

PROJ. MGR. -	JJB
DESIGN -	TBF
CADD -	TBF
CHECKED -	JJB

NO.	DATE	REVISION	BY

LANDWORKS
CIVIL DESIGN, LLC
land development consultants
1155 VIRGINIA AVENUE
P (717) 393-1195
YORK, PA 17403
www.landworksdesign.com

DEMOLITION PLAN
FOR
283 COMMERCE CENTER - BUILDING #1
FOR
PDC NORTHEAST LPIV, LLC
MOUNT JOY TOWNSHIP
LANCASTER COUNTY, PENNSYLVANIA

PROJECT NO.	22-0123-005
DATE:	01/03/23
SCALE:	1" = 50'
SHEET	**5 OF 54**

C-202

DRAWING REFERENCE: L:\Projects\2022\22-0123-005\CADD\Plan Sheets\Final\22-0123-005-03-Demolition Plan.dwg
PLOTTED: 1/4/2023, 9:27AM by tbfox

XREF'S: 22-0123-005_Base(L:\Drawing Based\22-0123-005_Base.dwg), 22-0123-005-Hatching(L:\Drawing Based\22-0123-005-Hatching.dwg), 22-0123-005-Header(L:\Drawing Based\22-0123-005-Header.dwg), 22-0123-005-Legend(L:\Drawing Based\22-0123-005-Legend.dwg)

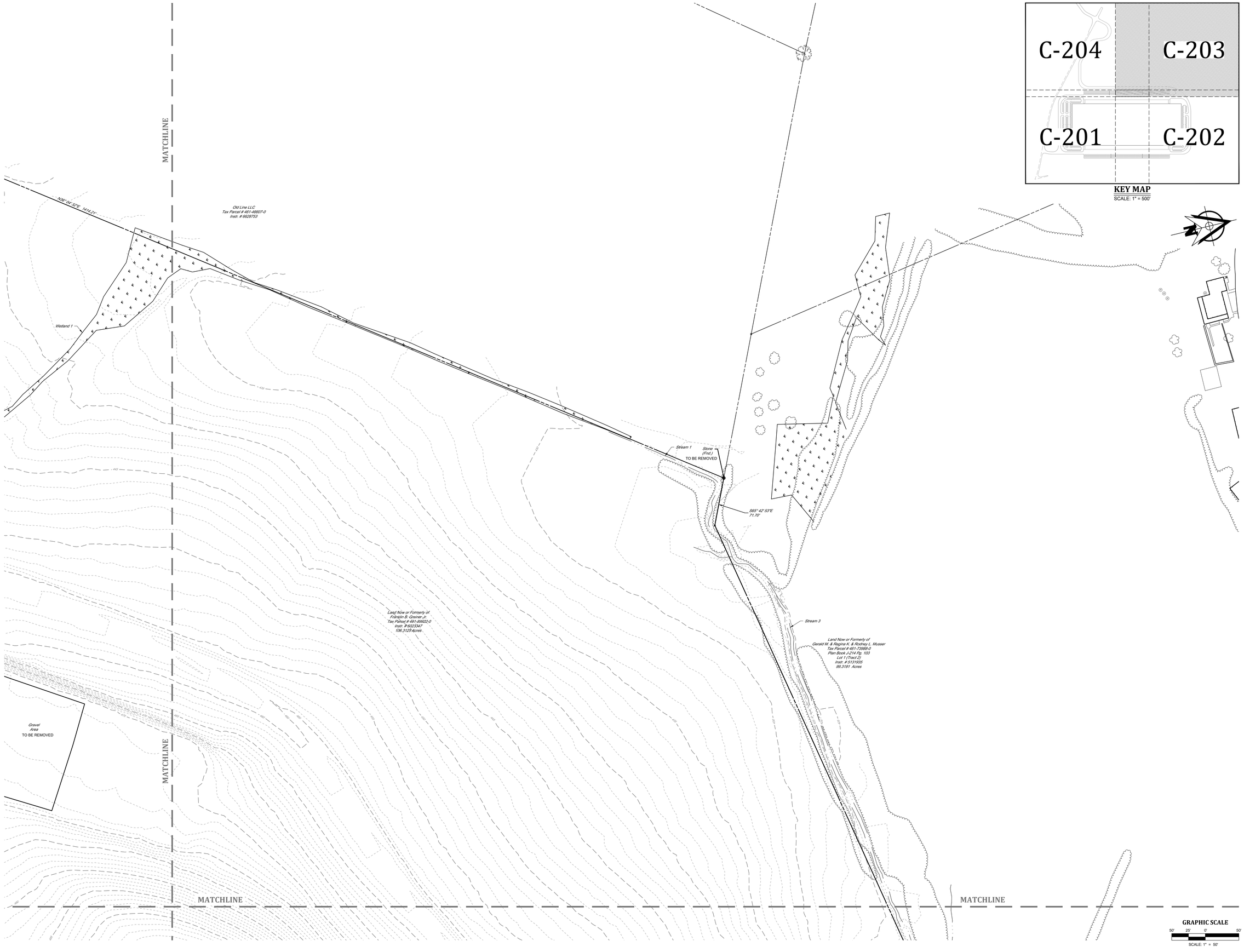

PROJ. MGR. -	JJB
DESIGN -	TBF
CADD -	TBF
CHECKED -	JJB

NO	DATE	REVISION	BY

LANDWORKS
CIVIL DESIGN, LLC
land development consultants
1195 VIRGINIA AVENUE
YORK, PA 17403
P: (717) 854-1195
www.landworksdesign.com

DEMOLITION PLAN
FOR
283 COMMERCE CENTER - BUILDING #1
FOR
PDC NORTHEAST LPIV, LLC
MOUNT JOY TOWNSHIP
LANCASTER COUNTY, PENNSYLVANIA

PROJECT NO.
22-0123-005

DATE: 01/03/23

SCALE: 1" = 50'

SHEET 6 OF 54

C-203

DRAWING REFERENCE: I:\Projects\2022\22-0123-005 283 Commerce Center - Building 1\Cad\Civil\Sheets\Final\22-0123-005-03-Demolition Plan.dwg
TRACING: Tracing - Tracing - 22x34 Tim Fox
XREFS: 22-0123-005_Base( ) ; Drawing Borders(22-0123-005_Borders.dwg) ; 22-0123-005-01-Layout Plan(22-0123-005-01-Layout Plan.dwg) ; 22-0123-005-04-Grading( ) ; Drawing Borders(22-0123-005-Borders.dwg) ; 22-0123-005-04-Grading( ) ; Drawing Borders(22-0123-005-Borders.dwg) ; 22-0123-005-07-Landscape( ) ; Drawing Borders(22-0123-005-Borders.dwg) ; 22-0123-005-07-Landscape( ) ; Drawing Borders(22-0123-005-Borders.dwg)

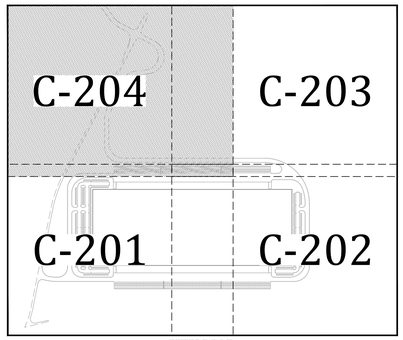

KEY MAP
SCALE: 1" = 500'

LEGEND

- EXISTING BOUNDARY LINE
- EXISTING ADJOINER BOUNDARY LINE
- EXISTING RIGHT-OF-WAY LINE
- EXISTING CURB
- EXISTING PAVEMENT
- EXISTING CONTOUR LINE
- EXISTING STREAM
- MUNICIPAL BOUNDARY LINE
- EXISTING GRAVEL DRIVE
- EXISTING VEGETATION
- EXISTING TREELINE
- EXISTING FENCE
- EXISTING OVERHEAD ELECTRIC LINE
- EXISTING UNDERGROUND ELECTRIC LINE
- EXISTING GUIDE RAIL
- EXISTING WETLANDS
- EXISTING UTILITY POLE
- EXISTING WATER VALVE
- EXISTING FIRE HYDRANT
- EXISTING WATER LINE
- EXISTING SANITARY SEWER MANHOLE
- EXISTING SANITARY SEWER LINE
- EXISTING STORM MANHOLE
- EXISTING STORM INLET
- EXISTING STORM PIPE (18" RCP)
- EXISTING ELECTRIC TRANSFORMER
- EXISTING ELECTRIC MANHOLE
- EXISTING COMMUNICATIONS MANHOLE
- EXISTING CABLE TV BOX
- EXISTING GAS METER
- EXISTING GAS MANHOLE
- EXISTING TELEPHONE BOX
- EXISTING WATER METER PIT
- EXISTING WATER MANHOLE
- EXISTING WELL
- EXISTING LIGHT STANDARD

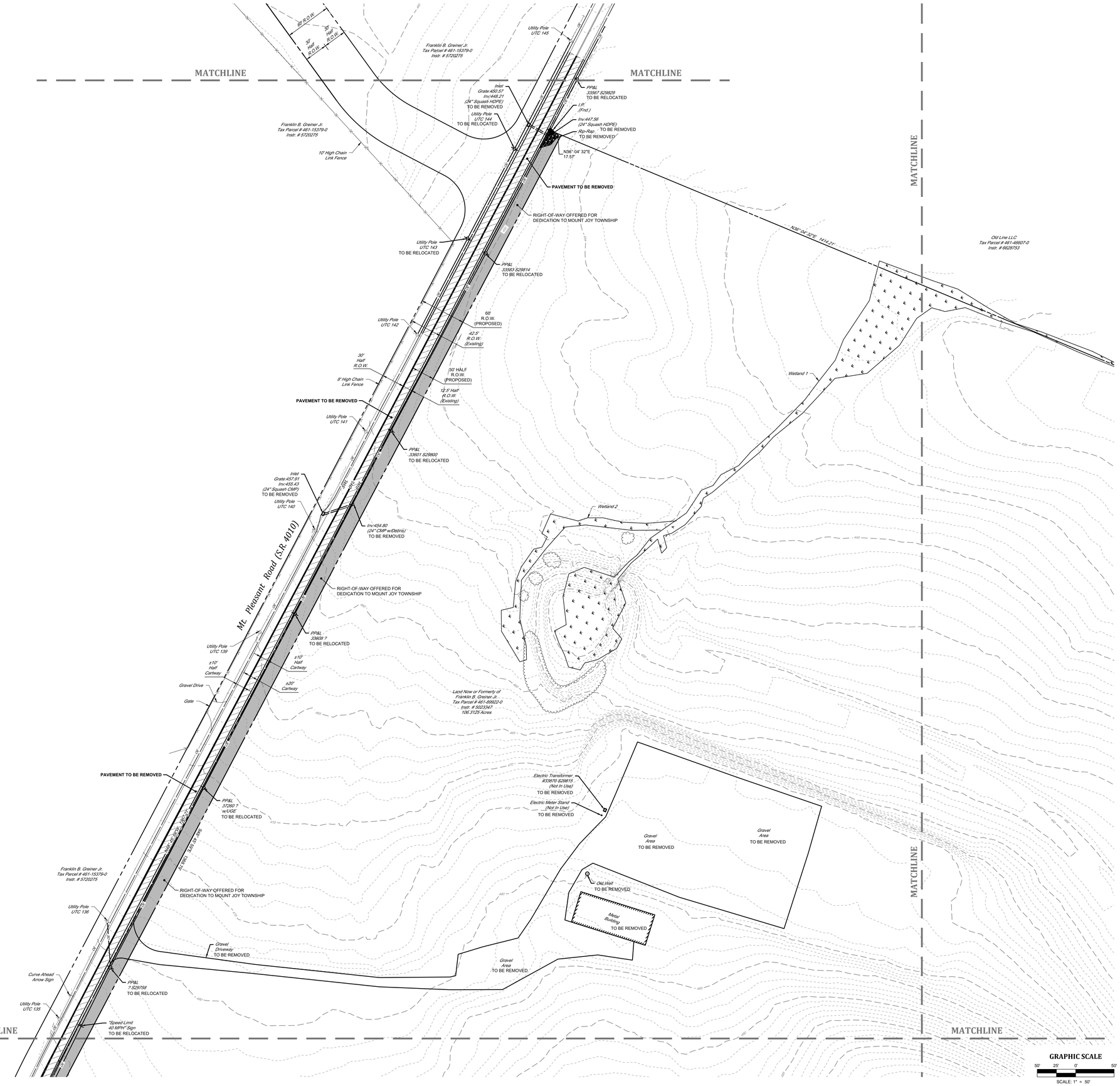

PROJ. MGR. -	JJB
DESIGN -	TBF
CADD -	TBF
CHECKED -	JJB

NO.	DATE	REVISION	BY

LANDWORKS
CIVIL DESIGN, LLC
land development consultants
1155 VIRGINIA AVENUE
P (717) 393-1155
YORK, PA 17403
www.landworksdesign.com

DEMOLITION PLAN
FOR
283 COMMERCE CENTER - BUILDING #1
FOR
PDC NORTHEAST LPIV, LLC
LANCASTER COUNTY, PENNSYLVANIA
MOUNT JOY TOWNSHIP

PROJECT NO.	22-0123-005
DATE:	01/03/23
SCALE:	1" = 50'
SHEET	**7 OF 54**

C-204

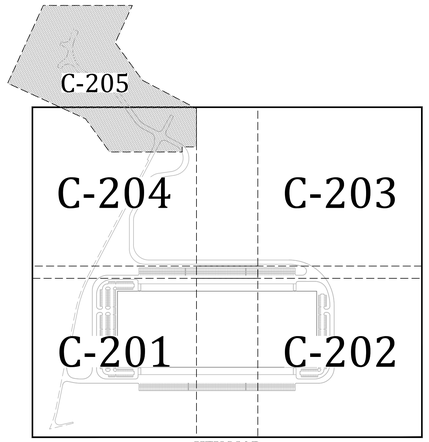

KEY MAP
SCALE: 1" = 500'

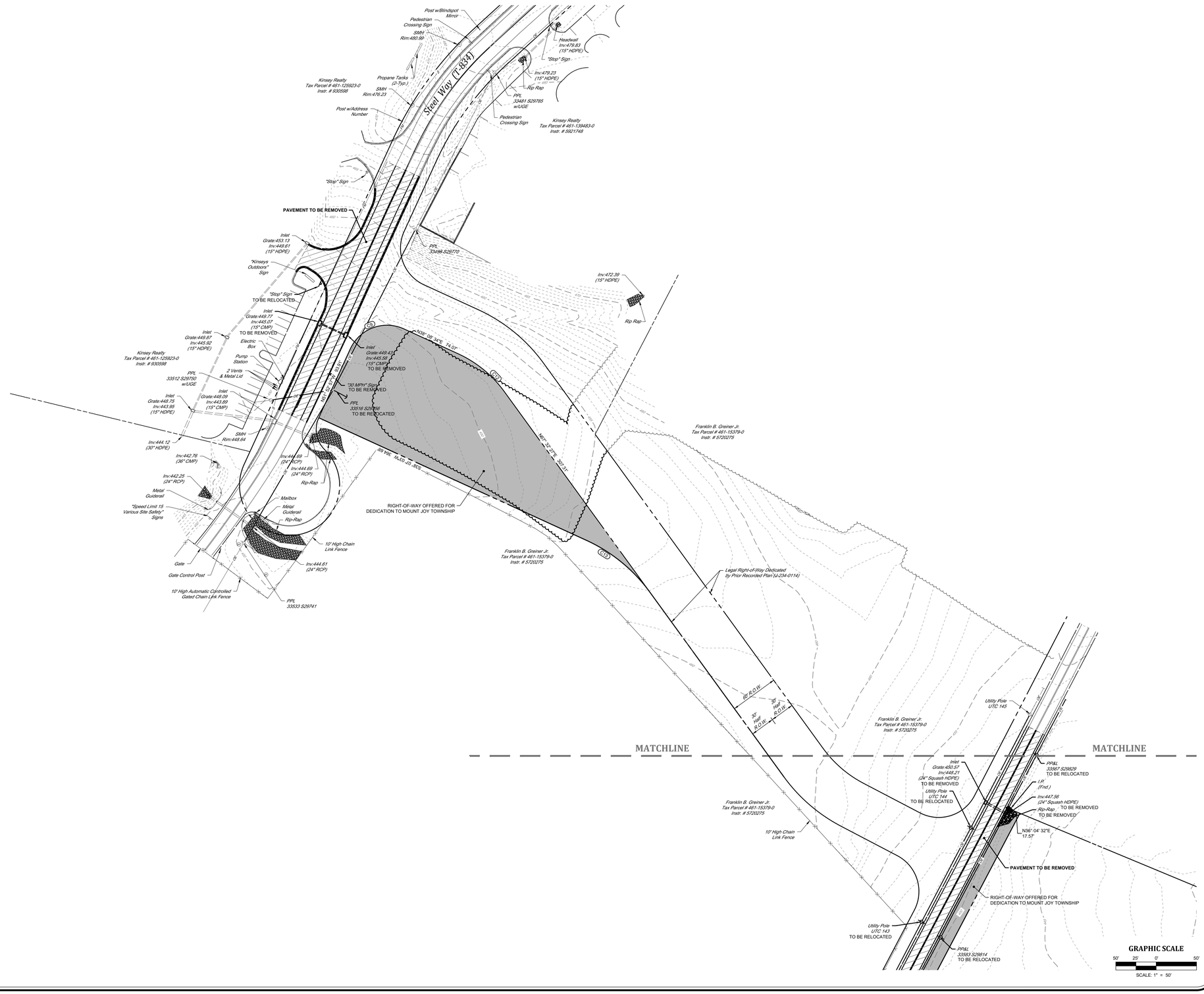

PROJ. MGR. -	JJB
DESIGN -	TBF
CADD -	TBF
CHECKED -	JJB

NO.	DATE	REVISION	BY

LANDWORKS
CIVIL DESIGN, LLC
land development consultants
1195 VIRGINIA AVENUE
YORK, PA 17403
P / F (717) 854-1195
www.landworksdesign.com

DEMOLITION PLAN
FOR
283 COMMERCE CENTER - BUILDING #1
FOR
PDC NORTHEAST LPIV, LLC
LANCASTER COUNTY, PENNSYLVANIA
MOUNT JOY TOWNSHIP

PROJECT NO.	22-0123-005
DATE:	01/03/23
SCALE:	1" = 50'
SHEET	**8 OF 54**

C-205

DRAWING REFERENCE: L:\Projects\2022\22-0123-005\CADD\Plan Sheets\Final\22-0123-005-03-Demolition Plan.dwg
PLOTTED: Jan 03, 2023 - 9:26AM By: tbf

XREFS: 22-0123-005_Base(L): L:\Drawing Basis\22-0123-005_Base.dwg; 22-0123-005_Base(L): L:\Drawing Basis\22-0123-005_Base.dwg; 22-0123-005-Base(L): L:\Drawing Basis\22-0123-005-Base.dwg; 22-0123-005-Base(L): L:\Drawing Basis\22-0123-005-Base.dwg; 22-0123-005-Base(L): L:\Drawing Basis\22-0123-005-Base.dwg; 22-0123-005-Base(L): L:\Drawing Basis\22-0123-005-Base.dwg

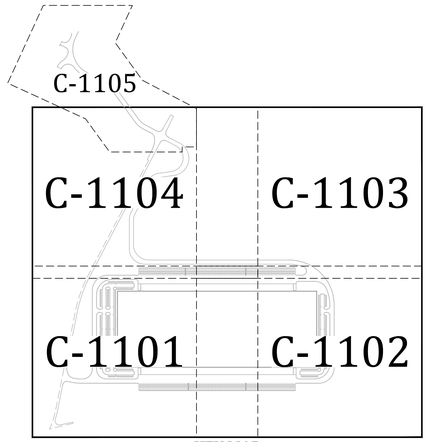

KEY MAP
SCALE: 1" = 500'

LEGEND

- COMPOST SOCK WASHOUT
- TEMPORARY FILTER SOCK
- TEMPORARY ROCK CONSTRUCTION ENTRANCE
- SOIL TYPE DESIGNATION
- SOIL TYPE BOUNDARY LINE
- LIMITS OF DISTURBANCE
- NPDES PERMIT BOUNDARY
- AREA OF REDUCED GRADING / MINIMIZED DISTURBANCE
- DYNAMIC BERM
- BAFFLE
- TOP OF SLOPE BERM
- INLET PROTECTION
- EROSION CONTROL MATTING
- TEMPORARY CONTOUR LINE

SOIL CLASSIFICATION

AbB: ABBOTTSTOWN SILT LOAM, 3% TO 8% SLOPES, HSG D
BdA: BEDINGTON SILT LOAM, 0% TO 3% SLOPES, HSG B
BdB: BEDINGTON SILT LOAM, 3% TO 8% SLOPES, HSG B
BdC: BEDINGTON SILT LOAM, 8% TO 15% SLOPES, HSG B
BeD: BEDINGTON CHANNERY SILT LOAM, 15% TO 25% SLOPES, HSG B
Bm: BLAIRTON SILT LOAM, 3% TO 10% SLOPES, HSG C
BuB: BUCKS SILT LOAM, 3% TO 8% SLOPES, HSG B
BuC: BUCKS SILT LOAM, 8% TO 15% SLOPES, HSG B
BuD: BUCKS SILT LOAM, 15% TO 25% SLOPES, HSG B
LaD: LANSDALE LOAM, 15% TO 25% SLOPES, HSG B
RaB: READINGTON SILT LOAM, 3% TO 8% SLOPES, HSG C
W: WATER

RECEIVING WATER CLASSIFICATION & DESIGNATION

RECEIVING WATER: UNT TO LITTLE CHIQUES CREEK

EXISTING USE: NONE

DESIGNATED USE: TROUT STOCKED FISHERY, MIGRATORY FISHES (TSF, MF)

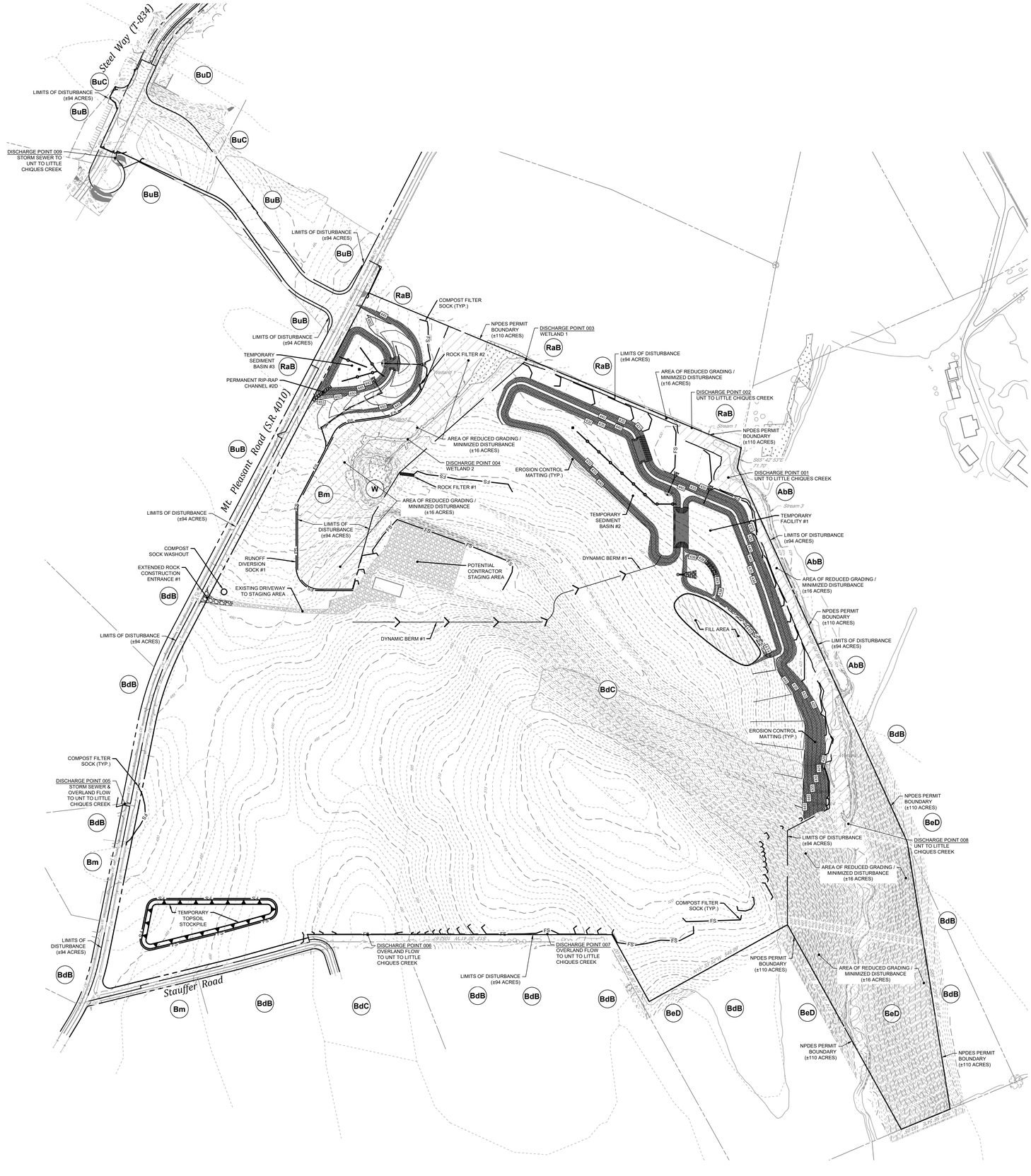

GRAPHIC SCALE
150' 75' 0' 150'
SCALE: 1" = 150'

PROJ. MGR. -	JJB
DESIGN -	TBF
CADD -	TBF
CHECKED -	JJB

NO.	DATE	REVISION	BY

LANDWORKS
CIVIL DESIGN, LLC
land development consultants
1155 VIRGINIA AVENUE
P / (717) 393-1155
YORK, PA 17403
www.landworkscivil.com

OVERALL EROSION & SEDIMENTATION CONTROL PLAN - PHASE I
FOR
283 COMMERCE CENTER - BUILDING #1
FOR
PDC NORTHEAST LP/V, LLC
MOUNT JOY TOWNSHIP
LANCASTER COUNTY, PENNSYLVANIA

PROJECT NO.	22-0123-005
DATE:	01/03/23
SCALE:	1" = 150'
SHEET	53 OF 54

C-1100

XREFS: [ ] Drawing Based=22-0123-005_xrefs.dwg
[ ] Drawing Base=22-0123-005_xrefs.dwg
[ ] Drawing Base=22-0123-005-xref-Topo.dwg
[ ] Drawing Base=22-0123-005-xref-Survey.dwg
[ ] Drawing Base=22-0123-005-xref-Site Plan.dwg
[ ] Drawing Base=22-0123-005-xref-Grading.dwg
[ ] Drawing Base=22-0123-005-xref-Utility Plan.dwg
DRAWING REFERENCE: L:\Projects\2022\22-0123-005 13-Owned Edd Plan - Phase I.dwg
TRACING: L:\Projects\22-0123-005 Site Plan.dwg