MOUNT JOY TOWNSHIP

LANCASTER COUNTY, PENNSYLVANIA

Application for Consideration of a Subdivision and/or Land Development Plan

For Mount Joy Township Use Only:

M.J.T.P.C. File No.:	24-20-FLDP	Date of Receipt/Filing:	October 24, 2024
School District:	Donegal	X	Elizabethtown

The undersigned hereby applies for approval under Chapter 119, Subdivision and Land Development, of the Code of the Township of Mount Joy for the Plan submitted herewith and described below:

Plan & Project Information

Plan Name:	Final Land Development Plan for 1376 Campus Road - Phase 2				
Plan No.:	2024J13-001	Plan Date:	October 24, 2024		
Location:	1376 Campus Road				
Property Owner:	1376 Campus Road Associates, LLC				
Owner Address:	100 Front Street, Suite 560, West Conshohocken, PA 19428				
Telephone No.:	717-779-5120				
E-mail:	amiller@catacomm.com				
Deed Reference:	6776199	Tax Parcel No.:	4607260800000		
Plan Type:		Sketch		Preliminary	X Final
		Lot Line Change		Minor Agricultural or Land Development	
Description:	Residential subdivision proposing 27 single family units.				
Zoning District:	R-2 Medium Density Residential				
Is a zoning change necessary?		If yes, please specify:			
Is/was a zoning variance, special exception, or conditional use approval necessary?		If yes, attach ZHB decision.			
Total Acreage:	~10.44 Acres				
Name of applicant (if other than owner):					
Address:					
Telephone No.:					
E-mail:					
Firm which prepared plan:	RGS Associates, Inc.				
Address:	53 W. James Street, Suite 101, Lancaster, PA 17603				
Phone No.:	717-715-1396				
Person responsible for plan:	Chris Venarchick, RLA				
E-mail:	chrisv@rgsassociates.com				

8853 ELIZABETHTOWN ROAD, ELIZABETHTOWN, PA 17022
PHONE (717) 367-8917 –FAX (717) 367-9208
www.mtjoytwp.org

Proposed Lots and Units

	# of Lots	# of Units		# of Lots	# of Units
Total #			Mixed Use		
Agricultural			Single Family Detached	2	27
Commercial			Multifamily (attached-sale)		
Industrial			Multifamily (attached-rental)		
Institutional			Other:		

Total Square Feet of Ground Floor Area (building footprint):	
Total Square Feet of Existing Structures (all floors):	
Total Square Feet of Proposed Structures (all floors):	
Total Square Feet (or Acres) of Proposed Parkland/Other Public Use:	
Linear feet of new street:	
Identify all street(s) not proposed for dedication:	

Type of water supply proposed:

X	Public (Live)		Community
	Public (Capped)		Individual

Type of sanitary sewage disposal proposed:

X	Public (Live)		Community
	Public (Capped)		Individual

The undersigned hereby represents that, to the best of his knowledge and belief, all information listed above is true, correct and complete.

Signature of Landowner of Applicant

10/21/2024
Date

Revised 9/7/12

RGS ASSOCIATES

LANCASTER
53 W. James St.
Suite 101
Lancaster, PA 17603
717.715.1396

YORK
221 W. Philadelphia St.
Suite 108E
York, PA 17401
717.854.3910

HARRISBURG
P.O. Box 841
Camp Hill, PA 17001
717.599.7615

PAOLI
41 Leopard Rd.
Suite 300
Paoli, PA 19301
610.408.9011

RECEIVED
Oct 24 2024
MOUNT JOY TOWNSHIP

October 24, 2024

24-20-FLDP

Justin Evans, Township Manager
Mount Joy Township
8853 Elizabethtown Road
Elizabethtown, Pennsylvania 17022

RE: 1376 Campus Road
Final Subdivision & Land Development Plan – Phase 2
Mount Joy Township
RGS Project No: 2024J13-001

Dear Justin:

RGS Associates, on behalf of 1376 Campus Road Associates, LLC, is pleased to submit the Final Subdivision & Land Development Plan for 1376 Campus Road – Phase 2. The property is located at 1376 Campus Road and is approximately 129 acres within the R-2 Medium Density Residential Zoning District. Phase 2 proposes to subdivide the previously created Lot 8 into Lots 7 & 8 and develop them as a residential community consisting of 27 single-family detached units. Access to the site will be provided by a public street connection to Campus Road to the east and Groff Avenue to the northwest in Elizabethtown Borough. The proposed streets within the community are designed to be offered for public dedication.

The layout follows the Preliminary Plan and respects the existing topography and retains the existing streams, floodplains and wetlands as valuable ecological features. Existing woodland is also preserved to the greatest extent possible. This plan reflects the actual building footprints as compared to the conceptual rectangle footprints that were shown on the Preliminary Plan. The proposed impervious is less than what was shown and approved on the Preliminary Plan.

Stormwater management design incorporates peak rate and volume control to meet the Township's Stormwater Management Ordinance. The existing topography results in a site that is divided into multiple post-developed drainage areas. To control runoff several stormwater facilities were proposed within the various drainage areas to manage and release runoff per the Stormwater Ordinance requirements. Stormwater facilities were proposed as part of the Phase 1A Final Plan with the exception of BMP-009 which is proposed as part of this plan. E&S and NPDES permitting was approved by the Lancaster County Conservation District and the PA Department of Environmental Protection. For the Phase 2 analysis, the stormwater management facilities were re-routed with revised drainage areas and impervious coverages resulting from the revised Phase 2

layout and grading. The stormwater management report shows all stormwater management facilities within Phase 2 to have outflows less than or equal to the approved preliminary flows.

Public water and sewer will serve the community. Capacity approval letters have been received from Elizabethtown Area Water Authority and Elizabethtown Regional Sewer Authority, respectively and were previously provided to the Township. The sewer planning module and Water Quality Permit have been approved by DEP.

A Traffic Impact Study, Geotechnical Report, Sewer/Water Feasibility Report, Floodplain Report and Wetland Report were previously submitted to the township as part of the Preliminary Plan. Additional copies can be provided upon request. A Lighting Plan has been included with this submission.

Final Phase 2 Plans and reports have been submitted directly to the Lancaster County Planning Commission, EAWA, ERSA and Lancaster Civil Engineering Company for review. We request that this package be discussed at the November 25, 2024 Mount Joy Township Planning Commission meeting.

Thank you for your assistance with this review process.

Sincerely,

RGS ASSOCIATES, INC.

Chris Venarchick, RLA, ASLA
Principal

RGS ASSOCIATES, INC.

Nicholas Grandi, RLA, ASLA
Senior Landscape Architect

cc: Ben Craddock, Lancaster Civil
Farah Eustace, Lancaster County Planning Commission
Nick Viscome, Elizabethtown Regional Sewer Authority
Abraham King, Rettew
Del Becker, Elizabethtown Area Water Authority
Mike Krieger, GHD
Andy Miller, Catalyst Commercial Development
Claudia Shank, McNees Wallace & Nurick

FINAL SUBDIVISION & LAND DEVELOPMENT PLAN
FOR
1376 CAMPUS ROAD - PHASE 2

LANCASTER COUNTY PLANNING DEPARTMENT REVIEW CERTIFICATE

THIS PLAN, BEARING LCPC FILE NO. _____, WAS REVIEWED BY STAFF OF THE LANCASTER COUNTY PLANNING DEPARTMENT ON _____, AS REQUIRED BY THE PENNSYLVANIA MUNICIPALITIES PLANNING CODE, ACT 247 OF 1968, AS AMENDED. THIS CERTIFICATE DOES NOT REPRESENT NOR GUARANTEE THAT THIS PLAN COMPLIES WITH THE VARIOUS ORDINANCE, RULES, REGULATIONS, OR LAWS OF THE LOCAL MUNICIPALITY, THE COMMONWEALTH, OR THE FEDERAL GOVERNMENT.

* _____

*SIGNATURE OF THE CHAIRMAN AND VICE CHAIRMAN OR THEIR DESIGNEES.

PLANNING COMMISSION FINAL PLAN APPROVAL CERTIFICATE

AT A MEETING ON _____, 20___, THE MOUNT JOY TOWNSHIP PLANNING COMMISSION APPROVED THIS PROJECT, INCLUDING THE COMPLETE SET OF PLANS AND INFORMATION WHICH ARE FILED WITH THE COMMISSION IN MOUNT JOY TOWNSHIP PLANNING COMMISSION FILE NO. _____ BASED UPON ITS CONFORMITY WITH THE STANDARDS OF CHAPTER 119, SUBDIVISION AND LAND DEVELOPMENT.

* _____ * _____

SIGNATURES OF THE CHAIRMAN AND VICE CHAIRMAN OR THEIR DESIGNEES.

CERTIFICATE OF OWNERSHIP, ACKNOWLEDGMENT OF PLAN, AND OFFER OF DEDICATION

1376 CAMPUS ROAD ASSOCIATES, LLC, A PENNSYLVANIA LIMITED LIABILITY COMPANY

COMMONWEALTH OF PENNSYLVANIA
COUNTY OF LANCASTER

ON THIS, THE _____DAY OF _____, 20 ____, BEFORE ME, THE UNDERSIGNED OFFICERS, PERSONALLY APPEARED _____

BEING A MEMBER OF 1376 CAMPUS ROAD ASSOCIATES, LLC, WHO, BEING DULY SWORN OR AFFIRMED ACCORDING TO LAW, DEPOSES THE PLAN, THAT HE IS AUTHORIZED TO EXECUTE SAID ON BEHALF OF THE LIMITED LIABILITY COMPANY, THAT THE LIMITED LIABILITY COMPANY DESIRES THE SAME TO BE RECORDED AND ON BEHALF OF THE LIMITED LIABILITY COMPANY FURTHER ACKNOWLEDGES THAT ALL STREETS AND OTHER PROPERTY IDENTIFIED AS PROPOSED PUBLIC PROPERTY (EXPECTING THOSE AREAS LABELED NOT FOR DEDICATION) ARE HEREBY DEDICATED TO THE PUBLIC USE

_____ NOTARY (SEAL) _____ MEMBER SIGNATURE

CERTIFICATE OF ACCURACY - SURVEY

I HEREBY CERTIFY THAT, TO THE BEST OF MY KNOWLEDGE, THE SURVEY SHOWN AND DESCRIBED HEREON IS TRUE AND CORRECT TO THE ACCURACY REQUIRED BY CHAPTER 119, SUBDIVISION AND LAND DEVELOPMENT.

_____, 20___. _____ SURVEYOR'S SIGNATURE

CERTIFICATE OF ACCURACY - PLAN

I HEREBY CERTIFY THAT, TO THE BEST OF MY KNOWLEDGE, THE PLAN SHOWN AND DESCRIBED HEREON IS TRUE AND CORRECT TO THE ACCURACY REQUIRED BY CHAPTER 119, SUBDIVISION AND LAND DEVELOPMENT.

_____, 20___, _____ ENGINEER'S SIGNATURE

ELIZABETHTOWN REGIONAL SEWER AUTHORITY CERTIFICATE

THE ELIZABETHTOWN REGIONAL SEWER AUTHORITY HEREBY CERTIFIES THAT:
(A) THIS PLAN HAS BEEN APPROVED FOR, OR RESERVED CAPACITY FOR: 27 EQUIVALENT DWELLING UNITS;
(B) THE AUTHORITY ENGINEER HAS APPROVED THE PROPOSED DESIGN AND CONSTRUCTION;
(C) A SEWER EXTENSION / DEVELOPMENT AGREEMENT HAS BEEN EXECUTED; AND
(D) SUFFICIENT FINANCIAL SECURITY HAS BEEN PROVIDED TO THE AUTHORITY TO FULLY COVER THE COSTS FOR CAPACITY AND INSTALLATION OF THE PLANNED IMPROVEMENTS.

_____, 20___,

_____, 20___, _____ BOARD CHAIRMAN'S SIGNATURE

_____ ALTERNATE AUTHORIZED OFFICIAL'S SIGNATURE

ELIZABETHTOWN AREA WATER AUTHORITY CERTIFICATE

THE ELIZABETHTOWN AREA WATER AUTHORITY HEREBY CERTIFIES THAT:
(A) THIS PLAN HAS BEEN APPROVED FOR, OR RESERVED CAPACITY FOR: 27 EQUIVALENT DWELLING UNITS;
(B) THE AUTHORITY ENGINEER HAS APPROVED THE PROPOSED DESIGN AND CONSTRUCTION;
(C) A WATER EXTENSION / DEVELOPMENT AGREEMENT HAS BEEN EXECUTED; AND
(D) SUFFICIENT FINANCIAL SECURITY HAS BEEN PROVIDED TO THE AUTHORITY TO FULLY COVER THE COSTS FOR CAPACITY AND INSTALLATION OF THE PLANNED IMPROVEMENTS.

_____, 20___,

_____, 20___, _____ BOARD CHAIRMAN'S SIGNATURE

_____ ALTERNATE AUTHORIZED OFFICIAL'S SIGNATURE

CERTIFICATION OF CARBONATE GEOLOGY

I, _____, CERTIFY THAT THE PROPOSED STORM WATER MANAGEMENT BASIN(S) IS NOT UNDERLAIN BY CARBONATE GEOLOGY.

_____ DATE _____ GEOLOGIST'S SIGNATURE

SITE / ZONING DATA

TOTAL SITE ACREAGE (ALL PHASES)	128.50 AC. (GROSS) 127.53 AC. (NET)
PHASE 2 SITE ACREAGE	5.75 AC. (LOT 6) 2.52 AC. (LOT 7) 2.17 AC. (LOT 8)
EXISTING LAND USE:	AGRICULTURAL
PROPOSED LAND USE:	RESIDENTIAL
SEWER:	PUBLIC
WATER:	PUBLIC
FULL-BUILD:	
PROPOSED SINGLE-FAMILY DETACHED:	209 UNITS
PROPOSED APARTMENT HOUSES:	11 (280 UNITS)
PROPOSED UNITS:	489 UNITS
PROPOSED LOTS:	13 LOTS
PHASE 1A:	
PROPOSED SINGLE-FAMILY DETACHED:	70 UNITS
PROPOSED APARTMENT HOUSES:	N/A
PROPOSED UNITS:	70 UNITS
PROPOSED LOTS:	10 LOTS
PHASE 1B:	
PROPOSED SINGLE-FAMILY DETACHED:	N/A
PROPOSED APARTMENT HOUSES:	11 (280 UNITS)
PROPOSED UNITS:	280 UNITS
PROPOSED LOTS:	N/A
PHASE 2:	
PROPOSED SINGLE-FAMILY DETACHED:	27
PROPOSED APARTMENT HOUSES:	N/A
PROPOSED UNITS:	27 UNITS
PROPOSED LOTS:	1
DENSITY:	
FULL-BUILD SINGLE-FAMILY DENSITY:	2.37 DWELLING UNITS PER ACRE
PHASE 1A & 2 SINGLE-FAMILY DENSITY:	0.80 DWELLING UNITS PER ACRE
LOT 1 APARTMENT DENSITY:	7.10 DWELLING UNITS PER ACRE
LOT 9 APARTMENT DENSITY:	7.08 DWELLING UNITS PER ACRE
ZONING:	R-2 MEDIUM-DENSITY RESIDENTIAL DISTRICT***

	REQUIRED	PROPOSED
LOT AREA:		
SINGLE-FAMILY DETACHED:	8,500 SF MIN.	> 8,500 SF
LOT WIDTH:		
SINGLE-FAMILY DETACHED:	70 FT. MIN.	> 70 FT.
LOT DEPTH:		
SINGLE-FAMILY DETACHED:	100 FT. MIN.	> 100 FT.
FRONT YARD:		
SINGLE-FAMILY DETACHED:	20 FT. MIN.	20 FT.
ACCESSORY BUILDINGS:	35 FT. MIN.	35 FT.
REAR YARD:		
SINGLE-FAMILY DETACHED:	20 FT. MIN.	20 FT.
ACCESSORY BUILDINGS:	6 FT. MIN.	6 FT.
SIDE YARD:		
SINGLE-FAMILY DETACHED:	8 FT. MIN.	8 FT.
ACCESSORY BUILDINGS:	6 FT. MIN.	6 FT.
BUILDING HEIGHT:	*35 FT. MAX.	< 35 FT.
ACCESSORY BUILDINGS:	20 FT. MAX.	< 20 FT.

	REQUIRED	EXISTING	PROPOSED
BUILDING COVERAGE:	30% MAX.	0.2%	<30%**
IMPERVIOUS COVERAGE:	35% MAX.	0.4%	<35%**

PARKING: TWO PARKING SPACES FOR EACH DWELLING UNIT WITH THREE BEDROOMS OR FEWER.

SINGLE FAMILY: 27 UNITS
PARKING REQUIRED: 54 SPACES
PARKING PROPOSED: 54 SPACES (2 SPACES IN EACH DRIVEWAY)

* AN ADDITIONAL SIDE YARD SETBACK OF ONE FOOT SHALL BE PROVIDED FOR EVERY TWO-FOOT, OR FRACTION THEREOF, INCREASE IN HEIGHT ABOVE 35 FEET. BUILDINGS DEVOTED TO AGRICULTURAL USE SHALL BE EXEMPT FROM HEIGHT REGULATIONS.

** COVERAGE/STORMWATER CALCULATIONS FOR LOTS 6, 7, AND 8 ASSUME THE MAXIMUM 30% BUILDING COVERAGE AND 35% IMPERVIOUS COVERAGE.

*** THE SUBJECT TRACT WAS REZONED FROM RURAL DISTRICT (R) TO MEDIUM DENSITY RESIDENTIAL DISTRICT (R-2) ON OCTOBER 19TH 2020 PER ORDINANCE NO. 324-2020

MOUNT JOY TOWNSHIP SWM SITE PLAN APPROVAL CERTIFICATE

AT A MEETING ON _____, 20 ____, THE MOUNT JOY TOWNSHIP PLANNING COMMISSION APPROVED THIS PROJECT, AND ALL CONDITIONS HAVE BEEN MET. THIS APPROVAL INCLUDES THE COMPLETE SET OF PLANS AND INFORMATION WHICH ARE FILED WITH THE TOWNSHIP IN MOUNT JOY TOWNSHIP PLANNING COMMISSION FIL NO._____, BASED UPON ITS CONFORMITY WITH THE STANDARDS OF CHAPTER 113, STORMWATER MANAGEMENT.

* _____ * _____

* SIGNATURES OF THE CHAIRMAN AND VICE CHAIRMAN OR THEIR DESIGNEES

OWNER STORMWATER MANAGEMENT ACKNOWLEDGMENT

THE STORMWATER MANAGEMENT FACILITIES ARE PERMANENT FIXTURES THAT CANNOT BE ALTERED OR REMOVED UNLESS A REVISED PLAN IS APPROVED BY THE TOWNSHIP.

_____, 20___, _____ MEMBER SIGNATURE

STORMWATER MANAGEMENT PLAN CERTIFICATION

I HEREBY CERTIFY THAT, TO THE BEST OF MY KNOWLEDGE, THE STORMWATER MANAGEMENT FACILITIES SHOWN AND DESCRIBED HEREON ARE DESIGNED IN CONFORMANCE WITH CHAPTER 119, SUBDIVISION AND LAND DEVELOPMENT, AND CHAPTER 113, STORMWATER MANAGEMENT.

_____, 20___, _____ PROFESSIONAL'S SIGNATURE

VARIANCES

THE FOLLOWING VARIANCES OF THE MOUNT JOY TOWNSHIP ZONING ORDINANCE WERE REQUESTED:

1. SECTION 135-105(B) - MINIMUM LOT AREA
   ACTION: GRANTED DATE: 10/04/2023
2. SECTION 135-105(C) - MINIMUM LOT WIDTH
   ACTION: GRANTED DATE: 10/04/2023

PRIOR PLANS OF RECORD AND STORMWATER MANAGEMENT AGREEMENTS

FINAL LAND DEVELOPMENT PLAN FOR 1376 CAMPUS ROAD - PHASE 1B
PREPARED BY RGS ASSOCIATES, INC.
DATED 8/9/24; REVISED 10/14/24

FINAL SUBDIVISION AND LAND DEVELOPMENT PLAN FOR 1376 CAMPUS ROAD - PHASE 1A
PREPARED BY RGS ASSOCIATES, INC.
DATED 12/2/22; REVISED 5/7/24
2024-0333-J

PRELIM/FINAL LAND DEVELOPMENT PLAN FOR 1376 CAMPUS ROAD - ROADWAY EXTENSION
PREPARED BY RGS ASSOCIATES, INC.
DATED 5/20/22; REVISED 3/26/24
2024-0310-J

FINAL MINOR SUBDIVISION PLAN FOR 1376 CAMPUS ROAD
PREPARED BY RGS ASSOCIATES
DATED 12/2/23; REVISED 3/20/24
2024-0178-J

FINAL PLAN OF LOTS FOR RAYMOND H. AND ELIZABETH MYER
PREPARED BY CLIFFORD L. ROMIG
DATED 11/6/80
J-122-97

STORMWATER MANAGEMENT AGREEMENT AND DECLARATION OF EASEMENT
PREPARED BY MCNEES WALLACE AND NURICK LLC
DATED JULY 15, 2024
DOCUMENT #: 20246797244

AGREEMENT FOR GRANT OF PUBLIC ACCESS AND TRAIL EASEMENT
PREPARED BY MCNEES WALLACE AND NURICK LLC
DATED JULY 15, 2024
DOCUMENT #: 20246797245

AGREEMENT PROVIDING FOR GRANT OF CONSERVATION EASEMENT
PREPARED BY MCNEES WALLACE AND NURICK LLC
DATED JULY 15, 2024
DOCUMENT #: 20246797246

I HEREBY CERTIFY THAT, TO THE BEST OF MY KNOWLEDGE, THE ABOVE REFERENCED PLANS ARE THE ONLY PRIOR RECORDED PLANS FOR THE SUBJECT TRACT AND THAT NO NOTES AND/OR RESTRICTIONS ON SUCH AFFECT THE CURRENT DEVELOPMENT. I AM ALSO NOT AWARE OF ANY STORMWATER MANAGEMENT AGREEMENTS ASSOCIATED WITH THE SUBJECT PROPERTY.

_____, 20____. _____ PROFESSIONAL'S SIGNATURE

MODIFICATIONS

THE FOLLOWING WAIVERS OF THE MOUNT JOY TOWNSHIP SUBDIVISION AND LAND DEVELOPMENT ORDINANCE WERE REQUESTED:

1. SECTION 119-25.L(4)(C) - PHASING
   ACTION: APPROVED DATE: 6/27/2022
2. SECTION 119-31.A(1) - PLAN SCALE
   ACTION: APPROVED DATE: 6/27/2022
3. SECTION 119-53.B(1) - SIDEWALK ALONG BOTH SIDES OF AN ACCESS DRIVE
   ACTION: APPROVED DATE: 6/27/2022
4. SECTION 119-53.B(10) - GRASS PLANTING STRIP
   ACTION: APPROVED DATE: 6/27/2022
5. SECTION 119-54-D(3) - LOT WIDTH
   ACTION: APPROVED DATE: 6/27/2022
6. SECTION 119-56.D - UTILITY EASEMENT WIDTH
   ACTION: APPROVED DATE: 6/27/2022
7. SECTION 119-56.E - STORMWATER EASEMENT WIDTH
   ACTION: APPROVED DATE: 6/27/2022
8. SECTION 119-57.D - LOT LINE MARKERS
   ACTION: APPROVED DATE: 9/26/2022
9. SECTION 119-25.L(4)(C) - PHASING
   ACTION: APPROVED DATE: 10/24/2022
10. SECTION 119-61 - MANDATORY RECREATION DEDICATION (CREDIT FOR PROPOSED AMENITIES)
    ACTION: DEFERRED TO BOS DATE: 10/24/2022
11. SECTION 119-61 - MANDATORY RECREATION DEDICATION (CREDIT FOR PROPOSED AMENITIES)
    ACTION: APPROVED DATE: 12/19/2022
    CONDITIONS: REDUCTION IN THE AMOUNT OF $157,500.00 CONTINGENT ON THE HOA DOCUMENTS STATING THE TRAILS ARE OPEN TO THE GENERAL PUBLIC AND THE TOWNSHIP SOLICITOR'S REVIEW OF SAID DOCUMENTS
12. SECTION 119-23.B - MULTIPLE APPLICATIONS
    ACTION: APPROVED DATE: 12/28/2022
12. SECTION 119-25.L(4)(C) - PHASING
    ACTION: APPROVED DATE: 12/28/2022
13. SECTION 119-54.D(3) - LOT WIDTH
    ACTION: APPROVED DATE: 12/28/2022
14. SECTION: 119-61.H - FEE-IN-LIEU OF DEDICATION (FEE AT BUILDING PERMIT)
    ACTION: DENIED DATE: 1/23/2023
15. SECTION: 119.62.D - PEDESTRIAN EASEMENT LEGAL DESCRIPTIONS
    ACTION: APPROVED DATE: 1/23/2023

THE FOLLOWING WAIVERS OF THE MOUNT JOY TOWNSHIP STORMWATER MANAGEMENT ORDINANCE WERE REQUESTED:

1. SECTION 113-32.A(1)(C) - LOADING RATIOS
   ACTION: APPROVED DATE: 6/27/2022
2. SECTION 113-42.D - PLAN SCALE
   ACTION: APPROVED DATE: 6/27/2022
3. SECTION 113.31.L(1) - LIMITING ZONE
   ACTION: APPROVED DATE: 9/26/2022
4. 113-31.L(2)(a) - INFILTRATION
   ACTION: APPROVED DATE: 9/26/2022
5. 113-34.F - MINIMUM FLOOR ELEVATIONS
   ACTION: APPROVED DATE: 9/26/2022
6. 113-37.C(4)(D)[2] - CURBED STREET INLET TOPS
   ACTION: APPROVED DATE: 9/26/2022

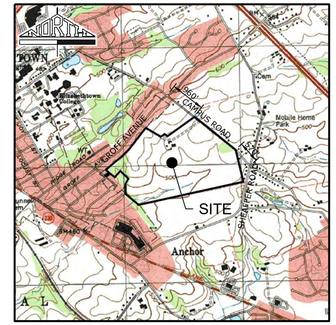

Copyright MyTopo Terrain Navigator

LOCATION MAP
SCALE: 1" = 2000'

WETLANDS INFORMATION

WETLANDS DELINEATION PROVIDED BY:
VORTEX ENVIRONMENTAL, INC.
2819-1 WILLOW STREET PIKE NORTH
WILLOW STREET, PA 17584
(717)509-3934
DATE: 05-21-21

GEOLOGIC INFORMATION

GEOLOGY STUDY PROVIDED BY:
ECS MID-ATLANTIC LLC
56 GRUMBACHER ROAD, SUITE D
YORK, PA 17406
(717) 767-4788
DATE: 11-04-21
JOB NO.: 18:5291

TRAFFIC INFORMATION

TRAFFIC STUDY PROVIDED BY:
TRANSPORTATION RESOURCE GROUP, INC.
204 NORTH GEORGE STREET, SUITE 260
YORK, PA 17401
(717) 846-4660
DATE: JUNE 2021
LAST REVISED: DECEMBER 3, 2021
PROJECT NO.: 228.024.18

OWNER OF RECORD

1376 CAMPUS ROAD ASSOCIATES, LLC
ONE TOWER BRIDGE
100 FRONT STREET, SUITE 560
WEST CONSHOHOCKEN, PA 19428

SOURCE OF TITLE

LANCASTER COUNTY, PA
PARCEL ID: 460726080000000
DEED REF: 6776199
1376 CAMPUS ROAD, ELIZABETHTOWN, PA 17022

LANCASTER COUNTY CODE

DISTRICT 460

SURVEY INFORMATION

BOUNDARY AND TOPOGRAPHY PROVIDED BY:
RETTEW ASSOCIATES, INC.
3020 COLUMBIA AVENUE
LANCASTER, PA 17603
(800)-738-8395
DATE: 01-13-21
DWG NO.: 111902012

EROSION AND SEDIMENT CONTROL PLAN RGS ASSOCIATES

SHEETS 1 OF 20 DATED: 12/13/2021
LAST REVISED: 3/23/2023

POST CONSTRUCTION STORMWATER MANAGEMENT PLAN RGS ASSOCIATES

SHEETS 1 OF 39 DATED: 12/13/2021
LAST REVISED: 7/5/2023

LIGHTING PLAN INDEPENDENCE LIGHTING

SHEETS 1 OF 21 DATED: 9/26/2023
LAST REVISED: 8/8/2024

DRAWING INDEX

1 COVER SHEET
2 GENERAL NOTES
3 EXISTING CONDITIONS & DEMOLITION PLAN
4 OVERALL SITE, PHASING, & DENSITY PLAN
5 SUBDIVISION & EASEMENT PLAN
6 SUBDIVISION & EASEMENT PLAN
7 SUBDIVISION & EASEMENT PLAN
8 SUBDIVISION & EASEMENT PLAN
9 SUBDIVISION & EASEMENT PLAN
10 SUBDIVISION & EASEMENT PLAN
11 SUBDIVISION & EASEMENT PLAN
12 SUBDIVISION & EASEMENT PLAN
13 SUBDIVISION & EASEMENT DATA
14 LAYOUT PLAN
15 CENTERLINE & SIGHT DISTANCE DATA
16 OVERALL GRADING PLAN
17 GRADING PLAN
18 OVERALL UTILITY PLAN
19 UTILITY PLAN
20 LANDSCAPE PLAN
21 LANDSCAPE NOTES & DETAILS
22 ROAD PROFILES
23 ROAD PROFILES
24 STORMWATER PROFILES
25 SITE DETAILS
26 SITE DETAILS
27 SEWER DETAILS
28 SEWER & WATER DETAILS
29 STORMWATER DETAILS
30 STORMWATER DETAILS
31 STORMWATER DETAILS
32 MATERIAL SPECIFICATIONS
33 OPERATION AND MAINTENANCE NOTES
34 BMP-009 PROFILES
* ALL SHEETS TO BE RECORDED

SITE FEATURE LEGEND

EXISTING FEATURES	PROPOSED FEATURES
454 GRADE CONTOUR	454 GRADE CONTOUR
455 GRADE INDEX CONTOUR	455 GRADE INDEX CONTOUR
×(428.17) SPOT ELEVATION	X 496.70 SPOT ELEVATION
BENCHMARK	IRON PIN
IRON PIN	MONUMENT
MONUMENT	BOUNDARY LINE
BOUNDARY LINE	LOT LINE
ADJOINER	RIGHT-OF-WAY LINE
RIGHT-OF-WAY LINE	SETBACK LINE
CENTERLINE	CENTERLINE
EASEMENT LINE	CLEAR SIGHT TRIANGLE
MUNICIPAL BOUNDARY	EASEMENT LINE
ZONING BOUNDARY	BUILDING
BUILDING	DOOR LOCATION
EDGE OF PAVEMENT	EDGE OF PAVEMENT
CURB	CURB
EDGE OF GRAVEL/DRIVEWAY	SIDEWALK & RAMP - CONCRETE
SIDEWALK	SIDEWALK - BITUMINOUS
WALL	BLOCK WALL
SIGN	SIGN
POND	POND
100 YEAR FLOODPLAIN EDGE OF FLOODPLAIN	PONDING ELEVATION
EDGE OF FLOODWAY	TREELINE
EDGE OF WETLANDS	OVERHEAD LIGHT FIXTURE
STREAM	MH-1 GRAVITY SEWER LINE & MANHOLE
TREELINE	FM SEWER FORCE MAIN
TP-1 TEST PIT LOCATION	SEWER LATERAL
SOILS	EW-A I-A1 STORM DRAIN PIPE & INLET & MANHOLE & ENDWALL
OE OVERHEAD ELECTRIC	STRUCTURE TYPE SYSTEM ID. NUMBER W./IN SYSTEM
G GAS	STORMWATER INFILTRATION
UTILITY POLE	UNDERDRAIN
S GRAVITY SEWER LINE & MANHOLE	W WATER LINE, VALVE, & HYDRANT
CMP CMP STORM DRAIN PIPE, ENDWALL, MANHOLE, & INLET	W W W WATER LATERAL
W WATER MAIN, VALVE & HYDRANT	CONSTRUCTION PHASE LINE

RECEIVED
Oct 24 2024
MOUNT JOY TOWNSHIP

NOT FOR BUILDING/NOT FOR CONSTRUCTION

NO	BY	DATE	REVISION

SEAL

SEAL

MANAGER: CHRIS VENARCHICK
DESIGN BY: NGG | CHECKED BY: CV
DRAWN BY: NGG | CHECKED BY: CV

SCALE: N.T.S.

CLIENT
1376 CAMPUS ROAD ASSOCIATES, LLC
ONE TOWER BRIDGE
100 FRONT STREET, SUITE 560
WEST CONSHOHOCKEN, PA 19428
(571) 276-3184

PROJECT TITLE
1376 CAMPUS ROAD - PHASE 2
FINAL SUBDIVISION & LAND DEVELOPMENT PLAN
MOUNT JOY TOWNSHIP LANCASTER COUNTY, PA.

SHEET TITLE
COVER SHEET

Land Planning
Landscape Architecture
Civil Engineering
53 West James Street
Suite 101, Lancaster, PA 17603
(717) 715-1396 FAX (717) 435-8277
221 W. Philadelphia Street
Suite 108, York, PA 17401
(717) 854-3703
320 N. Market Street
Suite 550W, Harrisburg, PA 17101
(717) 599-7615
E-mail:info@rgsassociates.com
www.rgsassociates.com

RGS ASSOCIATES

DATE: OCTOBER 24, 2024
PROJECT NO.: 2024J13-001

SHEET NO.: 1 OF 34

20-24-FLDP

PLOTTED: Thursday, October 24, 2024 @ 09:02AM
SUBDIVISION.SCR
FILENAME: P:\2024\2024J13-001\CADD\FINAL PH2\Plot\Z-Cover.dwg XREFS: Cover; Titleblock IMAGES:

GENERAL NOTES

1. BENCHMARKS: BENCHMARK "A" IS A REBAR SET ON THE SOUTHEAST SIDE OF A FARM LANE. ELEVATION=543.21' NAVD88 DATUM. BENCHMARK "B" IS A REBAR SET ALONG THE MIDPOINT IN THE SOUTHEASTERN PROPERTY LINE. ELEVATION= 496.95' NAVD88 DATUM. (SEE SHEET EXISTING CONDITIONS & DEMOLITION PLAN FOR LOCATION).
2. BOUNDARY AND TOPOGRAPHICAL INFORMATION PROVIDED BY RETTEW ASSOCIATES, PROJECT NAME: 1376 CAMPUS ROAD, PROJECT NO.: 111902012 DATED: 01/13/2021.
3. THIS PROPERTY WAS SURVEYED USING THE CURRENT DEED OR DEEDS OF RECORDS AND WITHOUT THE BENEFIT OF A "TITLE SEARCH."
4. HORIZONTAL DATUM: NAD83 PENNSYLVANIA STATE PLANE COORDINATE SYSTEM; SOUTH ZONE
5. VERTICAL DATUM: NAVD88
6. UNDERGROUND UTILITY LOCATIONS ARE APPROXIMATE AND WERE DETERMINED FROM VISIBLE LOCATION, PA ONE CALL UTILITY RESPONSES AND/OR BEST AVAILABLE PLAN INFORMATION. PA ONE CALL NOTIFICATION SERIAL NUMBERS ARE 20203033598, ELIZABETHTOWN BORO & 20203033597, MOUNT JOY TWP, BOTH DATED 11/14/2020. (RETTEW CANNOT GUARANTEE THE EXACT LOCATION OF ANY UNDERGROUND UTILITIES OR STRUCTURES. AN EXACT LOCATION CAN ONLY BE OBTAINED BY SUBSURFACE EXPLORATION, WHICH IS NOT WITHIN THE SCOPE OF THIS CONTRACT).
7. PERMANENT MONUMENTS ⬢ AND LOT MARKERS ○ SHALL BE SET UPON COMPLETION OF FINAL GRADING AT THE LOCATIONS TO BE SHOWN ON THE FINAL PLAN.
8. ANY ALTERATIONS TO THIS PLAN AFTER THE DATE OF PLAN PREPARATION OR LATEST REVISION SHALL NOT BE THE RESPONSIBILITY OF RGS ASSOCIATES, INC.
9. THE TOWNSHIP SHALL HAVE THE RIGHT FOR ENTRY FOR THE PURPOSES OF INSPECTING ALL STORMWATER CONVEYANCE, TREATMENT, OR STORAGE FACILITIES.

UTILITY NOTES

A. GENERAL NOTES - SANITARY SEWER

1. MINIMUM OF 3'-6" OF COVER IS REQUIRED OVER ALL SEWER LINES. THE SEWER MAIN SHALL BE CONSTRUCTED TO THE LINE AND GRADE SHOWN ON THE PLANS.
2. SANITARY SEWER FACILITIES SHALL BE CONSTRUCTED IN ACCORDANCE WITH MRSA SPECIFICATIONS.
3. THE CONTRACTOR IS RESPONSIBLE FOR ALL FIELD TESTING AND "RECORD DRAWINGS" PER THE AUTHORITY REQUIREMENTS. THE CONTRACTOR SHALL MAINTAIN FIELD RECORDS OF THE LOCATION AND DEPTH OF ALL SANITARY SEWER LATERAL LOCATIONS, AND SHALL PROVIDE THIS INFORMATION TO THE DESIGN ENGINEER FOR PREPARATION OF AS-BUILT DRAWINGS.
4. A MINIMUM VERTICAL SEPARATION OF 18" SHALL BE MAINTAINED BETWEEN ALL WATER AND SEWER CROSSINGS. IF THIS CLEARANCE CANNOT BE MAINTAINED, A CONCRETE ENCASEMENT SHALL BE PROVIDED.
5. ALL SANITARY SEWER IMPROVEMENTS SHALL BE IN ACCORDANCE WITH THE LATEST EDITION OF THE MUNICIPAL SEWER AUTHORITY CONSTRUCTION SPECIFICATIONS. IT IS THE CONTRACTOR'S RESPONSIBILITY TO BE AWARE OF APPLICABLE STANDARDS AND SPECIFICATIONS AS WELL AS THE REQUIRED METHODS OF CONSTRUCTION. ALL DEVIATIONS FROM THE PLANS MUST BE APPROVED PRIOR TO CONSTRUCTION.
6. 95% STANDARD PROCTOR FILL COMPACTION IS REQUIRED FOR ALL SANITARY SEWER FACILITIES LOCATED IN FILL MATERIAL. TESTING MUST BE IN ACCORDANCE WITH THE APPROPRIATE AASHTO AND ASTM STANDARDS.
7. ALL SANITARY SEWER MANHOLES WITHIN THE PUBLIC RIGHT-OF-WAY SHALL HAVE THE MANHOLE CONE SECTION ROTATED TO MINIMIZE IMPACTS WITHIN THE VEHICLE WHEEL PATHS.
8. ALL CLEANOUTS & SANITARY MANHOLES LOCATED WITHIN PAVED AREAS SHALL BE INSTALLED WITH TRAFFIC BEARING TOPS.
9. ALL PROPOSED SANITARY SEWERS WILL BE OFFERED FOR DEDICATION TO THE ELIZABETHTOWN REGIONAL SEWER AUTHORITY.
10. A MINIMUM OF 0.1FEET OF FALL SHALL BE PROVIDED THROUGH ALL SANITARY SEWER MANHOLES.
11. ALL SANITARY SEWERS SHALL BE CONSTRUCTED FROM SDR-35 PVC UNLESS OTHERWISE NOTED ON THE PLANS. IN AREAS WHERE COVER EXCEEDS 15 FEET, SDR-21 PVC SHALL BE USED FOR BOTH MAINS AND LATERALS.
12. SANITARY SEWER MAINS SHALL BE INSTALLED WITH AT LEAST 10 FEET HORIZONTAL SEPARATION AND/OR 18 INCHES OF VERTICAL SEPARATION FROM ALL OTHER UTILITIES. WHEN THESE CLEARANCES ARE NOT FEASIBLE, CONCRETE ENCASEMENT OF THE SEWER MAIN IS REQUIRED. SANITARY SEWERS SHALL BE INSTALLED BELOW WATER FACILITIES.
13. ALL SANITARY SEWER STREAM CROSSINGS SHALL BE CONSTRUCTED IN ACCORDANCE WITH PA DEP REGULATIONS CONTAINED IN THE STATE PROGRAMMATIC GENERAL PERMIT (PASPGP-2) AND PA DEP GENERAL PERMIT NO. 5 (UTILITY LINE STREAM CROSSINGS). PERMIT NO. GP043603222-001, GP053603222-002, & GP073603222-001.
14. MANHOLES IN EASEMENTS SHALL BE 12-18 INCHES ABOVE GRADE OR HAVE A WATERTIGHT FRAME AND COVER.
15. LATERALS AND TREES SHOULD BE INSTALLED AT A MINIMUM HORIZONTAL DISTANCE OF 10-FEET.

B. GENERAL NOTES - WATER SERVICE

1. CONTRACTOR SHALL INSTALL A COMPLETE WATER SYSTEM TO INCLUDE THE EXTENSION OF AN 8-INCH WATER MAIN AND INDIVIDUAL SERVICE LATERALS (EXACT LOCATION AND SIZE TO BE DETERMINED BY MEP) IN CONFORMANCE WITH THE SPECIFICATIONS AND DETAILS OF THE MUNICIPAL AUTHORITY.
2. THE CONTRACTOR IS RESPONSIBLE FOR ALL TESTING AND "RECORD DRAWINGS" PER AUTHORITY REQUIREMENTS.
3. ALL WATER MAINS CONSTRUCTION SHALL CONFORM TO THE ELIZABETHTOWN AREA WATER AUTHORITY DESIGN AND CONSTRUCTION MANUAL. NO SPECIFIC WAIVERS HAVE BEEN GRANTED. IT IS THE CONTRACTOR'S RESPONSIBILITY TO BE AWARE OF APPLICABLE STANDARDS AND SPECIFICATIONS AS WELL AS THE REQUIRED METHODS OF CONSTRUCTION. ALL DEVIATIONS FROM THE PLANS MUST BE APPROVED PRIOR TO CONSTRUCTION.
4. 95% FILL COMPACTION IS REQUIRED FOR ALL WATER DISTRIBUTION FACILITIES LOCATED IN FILL MATERIAL.
5. THE CONSTRUCTION OF WATER AND SANITARY SEWER LINES SHALL BE IN ACCORDANCE WITH PA DEP REGULATIONS RELATED TO HORIZONTAL AND VERTICAL SEPARATION.
6. ALL WATER APPURTENANCES SHALL BE SET TO FINISHED GRADE, UNLESS OTHERWISE NOTED.
7. IF A FIRE DEPARTMENT CONNECTION (FDC) IS REQUIRED FOR ANY BUILDING, THE FDC SHALL BE PLACED WITHIN A DISTANCE AS DETERMINED BY LOCAL, STATE AND FEDERAL REGULATIONS, PER NATIONAL FIRE PROTECTION ASSOCIATION (NFPA) CODE, AS REVISED, IN COORDINATION WITH MUNICIPAL STAFF AND THE LOCAL FIRE DEPARTMENT. THE FIRE HYDRANT LOCATION(S) DEPICTED ON THE PLANS HAVE BEEN PLACED WITH THE BEST AVAILABLE INFORMATION AVAILABLE AT THIS TIME. HOWEVER, RELOCATION OR ADDITIONS OF THE FDC MAY CAUSE THE NEED TO RELOCATE FIRE HYDRANTS.
8. FOR LANDS WITHIN ANY WATER FACILITY EASEMENT, EAWA SHALL HAVE THE RIGHT TO TRIM, CUT, OR REMOVE ANY TREES, SHRUBBERY, FENCE, STRUCTURE OR OTHER OBSTRUCTION THAT COULD REASONABLY INTERFERE WITH THE EFFICIENT, PROPER, AND SAFE ACCESS AND MAINTENANCE TO THE EASEMENT OR STRUCTURES THAT EXIST AT THE TIME OF THIS PLAN/AGREEMENT APPROVAL, AND EAWA SHALL HAVE NO OBLIGATION TO CORRECT, REPLACE, REPLANT, RESTORE SUCH MATERIAL OR BE FINANCIALLY RESPONSIBLE FOR SAME.

C. GENERAL NOTES - STORM DRAINAGE

1. THE OWNER OF EACH LOT WILL BE RESPONSIBLE FOR MAINTENANCE OF ALL STORMWATER FACILITIES LOCATED THEREON TO ENSURE THEY ARE KEPT IN A DESIGN CONDITION. DEVELOPER ANTICIPATES THAT MAINTENANCE RESPONSIBILITIES FOR THE STORMWATER MANAGEMENT FACILITIES LOCATED ON LOTS 3, 5, 6, 8, 10, 11 AND 12 WILL BE ASSIGNED TO A PLANNED COMMUNITY ASSOCIATION FOR ON-GOING MAINTENANCE UPON COMPLETION OF CONSTRUCTION. DEVELOPER ANTICIPATES THAT MAINTENANCE RESPONSIBILITIES FOR THE STORMWATER MANAGEMENT FACILITIES LOCATED ON LOTS 1 AND 9 WILL BE ASSIGNED TO A CONDOMINIUM ASSOCIATION FOR ON-GOING MAINTENANCE UPON COMPLETION OF CONSTRUCTION. BMP-013, SPECIFICALLY, WHICH SPANS LOTS 9 AND 10, WILL BE MAINTAINED BY THE CONDOMINIUM ASSOCIATION PURSUANT TO THE EASEMENT SET FORTH IN THE PLANNED COMMUNITY DECLARATION.
2. THE STORMWATER COLLECTION AND CONVEYANCE SYSTEM HAS BEEN DESIGNED IN ACCORDANCE WITH DESIGN STANDARDS AND SPECIFICATIONS IN PLACE AT THE TIME OF PLAN APPROVALS. RGS ASSUMES NO RESPONSIBILITY FOR CHANGES IN SPECIFICATIONS THAT MAY OCCUR AFTER PLAN APPROVAL THAT WOULD REQUIRE ALTERNATE MATERIALS OR INSTALLATION REQUIREMENTS. THE CONTRACTOR SHALL VERIFY ALL CURRENT STANDARDS AND NOTIFY THE OWNER/DEVELOPER AND RGS ASSOCIATES OF ANY DISCREPANCIES THAT MAY EXIST PRIOR TO THE START OF CONSTRUCTION.
3. CONSTRUCTION OF STORMWATER MANAGEMENT AND EROSION CONTROL FACILITIES SHALL BE IN ACCORDANCE WITH THE MUNICIPALITY AND COUNTY CONSERVATION DISTRICT STANDARDS AND SPECIFICATIONS.
4. ALL STORMWATER MANAGEMENT FACILITIES SHALL BE CONSTRUCTED IN ACCORDANCE WITH THE MATERIAL SPECIFICATIONS, UNLESS OTHERWISE NOTED.
5. EASEMENT CONFLICTS PROHIBITED: NOTHING SHALL BE PLACED, PLANTED, SET, OR PUT WITHIN THE AREA OF ANY EASEMENT THAT WOULD ADVERSELY AFFECT THE FUNCTION OF THE EASEMENT. NO PERSON SHALL PLACE ANY STRUCTURE, FILL, OR VEGETATION INTO A STORM WATER MANAGEMENT FACILITY OR WITHIN A DRAINAGE EASEMENT WHICH WILL LIMIT OR ALTER THE FUNCTIONS OF THE FACILITY OR EASEMENT IN ANY WAY.
6. THE MUNICIPALITY WILL HAVE THE RIGHT TO ACCESS FOR THE PURPOSE OF INSPECTING ALL STORMWATER CONVEYANCE, TREATMENT, OR STORAGE FACILITIES.
7. WHERE ANY PART OF THE PROPOSED STORM DRAIN SYSTEM IS TO BE CONSTRUCTED WITHIN A FILL SECTION, THE CONTRACTOR SHALL COMPACT ALL SELECT FILL MATERIAL TO 95% OF ASTM D-698 (AASHTO T-99) WITH A MOISTURE CONTENT ± 3% OF OPTIMUM UP TO THE PIPE BEDDING. REFER TO THE "STORMWATER MANAGEMENT CONSTRUCTION SPECIFICATIONS" FOR A DESCRIPTION OF SELECT FILL MATERIAL.
8. THE TOP OF THE GRATE OF ALL INLETS WITHIN VEHICULAR LOADING AREAS SHALL BE DEPRESSED 2 INCHES BELOW THE FLOWLINE. THE TOP OF GRATE OFF ALL INLETS WITHIN NON-VEHICULAR LOADING AREAS SHALL BE DEPRESSED 1 INCH BELOW THE FLOWLINE..
9. ALL EMBEDMENT MATERIALS USED FOR BEDDING, HAUNCHING AND INITIAL BACKFILL FOR SLCPP/HDPEP PIPE SHALL CONFORM TO AASHTO SECTION 30 AND ASTM D-2321 AS PER MANUFACTURER'S INSTALLATION REQUIREMENTS.

D. GENERAL NOTES - OTHER

1. ALL PROPOSED UTILITIES SHALL BE UNDERGROUND, UNLESS OTHERWISE NOTED.
2. CONTRACTOR SHALL COORDINATE UNDERGROUND ELECTRICAL SERVICE.
3. THE EXISTING UTILITIES SHOWN HAVE BEEN DETERMINED AND REFERENCED BASED UPON INFORMATION RECEIVED FROM THE UTILITY COMPANIES, SURVEYORS, VISITS TO THE SITE AND GENERAL BEST INFORMATION, TO THE BEST OF RGS ASSOCIATES' KNOWLEDGE, AT THE TIME OF DESIGN. IT IS THE CONTRACTOR'S RESPONSIBILITY TO FIELD VERIFY THE LOCATION OF ALL UTILITIES PRIOR TO CONSTRUCTION BY CALLING THE PENNSYLVANIA ONE CALL SYSTEM 1-800-242-1776 A MINIMUM OF 3 DAYS PRIOR TO EXCAVATING OR WITH CAREFUL EXPLORATORY WORK, AT THE CONTRACTOR'S RISK, PRIOR TO CONSTRUCTION FOR THOSE PRIVATE LINES WHICH ARE NOT ABLE TO BE LOCATED THROUGH THE ONE CALL PROCESS. IT MAY BECOME NECESSARY TO ADJUST THE PROPOSED UTILITY LOCATION IN THE FIELD TO RESOLVE ANY UTILITY CROSSING CONFLICTS WHICH MAY OCCUR. RGS ASSOCIATES SHALL BE NOTIFIED IMMEDIATELY IF ANY SUCH CONFLICTS ARE ENCOUNTERED.
4. ALL UTILITY ELEVATIONS ARE AT THE INVERT UNLESS OTHERWISE NOTED.

MUNICIPAL SPECIFIC NOTES

1. PROPOSED DRIVEWAYS SHALL BE LOCATED NOT LESS THAN 5 FEET FROM THE SIDE LOT LINE.
2. LIGHTING SHALL BE PROVIDED IN CONFORMANCE WITH SECTION 135-298, OF THE MOUNT JOY TOWNSHIP ZONING ORDINANCE AND SECTION 119-52.O OF THE MOUNT JOY TOWNSHIP SUBDIVISION AND LAND DEVELOPMENT ORDINANCE. ALL LIGHTING SHALL BE ACTUATED BY A PHOTOELECTRIC CONTROLLER. MAXIMUM POLE HEIGHT IS 15'. ALL LIGHTING FIXTURES SHALL MEET IESNA CUTOFF CRITERIA.
3. UNTIL SUCH TIME AS THE TOWNSHIP ACCEPTS A DEDICATION OF THE ASSOCIATED STREET, THE DEVELOPER OF THE TRACT (WHO HAS ESCROWED THE STREETLIGHTING) WILL BE RESPONSIBLE FOR ANY AND ALL COSTS ASSOCIATED WITH EACH STREETLIGHT. SUCH COSTS SHALL INCLUDE, BUT NOT BE LIMITED TO, ADMINISTRATION, PLACEMENT, ELECTRICAL CHARGES, AND MAINTENANCE. DEVELOPER ANTICIPATES THAT MAINTENANCE RESPONSIBILITIES AND RESPONSIBILITIES FOR ELECTRICAL CHARGES FOR THE STREETLIGHTS WILL BE ASSIGNED TO THE PLANNED COMMUNITY ASSOCIATION.
4. STREETLIGHTS NOT DEDICATED TO THE MUNICIPALITY WILL REMAIN THE RESPONSIBILITY OF THE DEVELOPER OF APPROPRIATE PRIVATE ENTITY, INCLUDING ALL COSTS AND RESPONSIBILITIES FOR THE LIGHTING IN PERPETUITY
5. ACCESS DRIVES PROPOSED AS PART OF THIS LAND DEVELOPMENT DO NOT QUALIFY FOR DEDICATION TO THE TOWNSHIP AND THE LANDOWNER ASSUMES ALL RESPONSIBILITY FOR THEIR MAINTENANCE AND REPAIR.
6. THE MUNICIPALITY IS NOT RESPONSIBLE FOR MAINTENANCE OF ANY AREA NOT DEDICATED TO AND ACCEPTED FOR PUBLIC USE, AND NO ALTERATION TO SWALES, OR BASINS, OR PLACEMENT OF STRUCTURES SHALL BE PERMITTED WITHIN EASEMENTS.
7. THE TYPICAL STREET CROSS-SECTION IS IN ACCORDANCE WITH THE MUNICIPAL ORDINANCE.
8. NOTHING SHALL BE PLACED, PLANTED, SET OR PUT WITHIN AN EASEMENT THAT WOULD ADVERSELY AFFECT THE FUNCTION OF THE EASEMENT OR CONFLICT WITH THE EASEMENT AGREEMENT.
9. PEDESTRIAN EASEMENTS SHALL BE FIVE FEET ON EITHER SIDE OF THE CENTERLINE OF THE TRAIL AS CONSTRUCTED.
10. TRASH DISPOSAL AND RECYCLING AT THE SINGLE FAMILY HOMES WILL BE PROVIDED BY INDIVIDUAL TRASH AND RECYCLING TOTES AT EACH RESIDENCE. THE INDIVIDUAL TRASH AND RECYCLING TOTES WILL BE EMPTIED ON A WEEKLY SCHEDULE THROUGH THE MOUNT JOY TOWNSHIP TRASH AND RECYCLING PROGRAM.
11. LITTER CLEAN-UP WILL BE PROVIDING BY GROUNDSKEEPERS THAT WILL BE HIRED UNDER CONTRACT BY THE HOME OWNERS ASSOCIATION.
12. APPLICANT SHALL PAY MOUNT JOY TOWNSHIP TRAFFIC IMPACT FEES, AS REQUIRED BY CHAPTER 125 OF THE CODE OF ORDINANCES OF THE TOWNSHIP OF MOUNT JOY, IN THE TOTAL DOLLAR AMOUNT OF $332,008.00 (188 P.M. PEAK HOUR TRIPS @ $1,766/TRIP). PAYMENT OF THE TRAFFIC FEES SHALL BE MADE AT THE TIME AN APPLICATION IS MADE FOR THE REQUIRED BUILDING PERMIT. AS AN ALTERNATIVE, APPLICANT MAY ENTER INTO AN AGREEMENT WITH THE TOWNSHIP TO SEEK A CREDIT FOR THE TRAFFIC IMPACT FEES IN RETURN FOR CONSTRUCTION OF THE CAMPUS ROAD ROUNDABOUT AS GENERALLY DEPICTED ON THE PLANS. APPLICANT SHALL NOT AT ANY TIME IN THE FUTURE SEEK RETURN OF SUCH IMPACT FEES, OR ANY EARNED ACCRUED INTEREST THEREON, OR AUTHORIZE ANY SUCCESSOR TO MAKE SUCH CLAIM, WHETHER OR NOT THE TOWNSHIP EXTENDS THE TRAFFIC IMPACT FEES WITHIN THE TIME LIMITATIONS SET FORTH IN ACT 209 OF 1990, AS AMENDED, 53 P.S. §10501-A, ET SEQ., EXPAND THE TRAFFIC IMPACT FEES FOR IMPROVEMENTS SET FORTH IN THE TRANSPORTATION CAPITAL IMPROVEMENTS PLAN OR FOR OTHER ROAD IMPROVEMENTS NOT ADDRESSED IN THE TRANSPORTATION CAPITAL IMPROVEMENTS PLAN OR FOR ROAD IMPROVEMENTS TO ADDRESS EXISTING DEFICIENCIES NOR FOR IMPROVEMENTS (REGARDLESS OF THE PERCENTAGE OF THE COST OF IMPROVEMENTS OR THE AMOUNT OF THE IMPROVEMENTS PAID FOR WITH TRAFFIC IMPACT FEES) TO STATE HIGHWAYS.
12.1. DEVELOPER AND MERIDIAN HEIGHTS PARTNERS LLC ENTERED INTO AN AGREEMENT WITH THE TOWNSHIP DATED JULY 10, 2024, WHICH WAS RECORDED ON AUGUST 27, 2024, AT DOCUMENT NO. 20246797225.

SPECIFIC RIGHTS OF MOUNT JOY TOWNSHIP

1. LOT 1 AND LOT 9 CREATED BY THIS PLAN CONTAIN THE MAXIMUM NUMBER OF DWELLING UNITS ALLOWED. ALL LAND WITHIN LOT 1 AND ALL LAND WITHIN LOT 9 SUITABLE FOR THE DEVELOPMENT OF THE NUMBER OF DWELLING UNITS SHOWN ON THIS PLAN. NEITHER LOT 1 NOR LOT 9 MAY BE SUBDIVIDED IN THE FUTURE EXCEPT FOR THE CREATION OF UNITS AND COMMON ELEMENTS PURSUANT TO THE APPLICABLE DECLARATIONS CREATING A PLANNED COMMUNITY AND/OR CONDOMINIUM APPLICABLE TO SUCH LOTS. THE DECLARATIONS FOR SUCH DECLARATIONS BY MOUNT JOY TOWNSHIP PURSUANT TO THE REMAINDER OF THIS NOTE. NO ADDITIONAL DWELLING UNITS OR PRINCIPAL STRUCTURES OF ANY TYPE MAY BE DEVELOPED ON LOT 1 OR LOT 9. LANDOWNER, FOR ITSELF AND SUCCESSOR OWNERS OF LOT 1 AND/OR LOT 9, AGREES THAT MOUNT JOY TOWNSHIP MAY WITHHOLD ANY PERMIT OR APPROVAL REQUIRED FOR THE DEVELOPMENT OF ANY ADDITIONAL DWELLING UNITS OR PRINCIPAL STRUCTURES ON LOT 1 AND LOT 9. LANDOWNER, FOR ITSELF AND SUCCESSOR OWNERS OF LOT 1 AND/OR LOT 9, WAIVES ANY CLAIM UNDER THE PENNSYLVANIA MUNICIPALITIES PLANNING CODE, PENNSYLVANIA CONSTRUCTION CODE ACT, UNIFORM CONSTRUCTION CODE OR TOWNSHIP ORDINANCE FOR A DEEMED APPROVAL IF THE TOWNSHIP REFUSED TO ISSUE ANY PERMIT OR APPROVAL FOR ANY ADDITIONAL DWELLING UNITS OR PRINCIPAL STRUCTURES ON LOT 1 AND/OR LOT 9.
2. ALL OF THE DWELLING UNITS TO BE DEVELOPED ON LOT 1 AND LOT 9 SHOWN ON THIS PLAN SHALL BE HELD IN SINGLE OWNERSHIP. IF THE LANDOWNER DESIRES TO CREATE A CONDOMINIUM AND/OR A PLANNED COMMUNITY ALLOWING INDIVIDUAL OWNERSHIP OF THE DWELLINGS ON LOT 1 AND/OR LOT 9, THE LANDOWNER SHALL SUBMIT THE DECLARATIONS OF CONDOMINIUM OR PLANNED COMMUNITY TO MOUNT JOY TOWNSHIP FOR REVIEW AND APPROVAL PRIOR TO RECORDING. SUCH DECLARATIONS SHALL PROVIDE FOR PERMANENT MAINTENANCE OF ALL STORM WATER MANAGEMENT FACILITIES, ACCESS DRIVES, SIDEWALKS, OFF-STREET PARKING FACILITIES, REQUIRED LANDSCAPING AND THE TRAIL SYSTEM IN CONFORMANCE WITH ALL MOUNT JOY TOWNSHIP ORDINANCES AND REGULATIONS AND THE CONDITIONS OF APPROVAL OF THIS PLAN. THE DECLARATIONS SHALL GRANT MOUNT JOY TOWNSHIP ALL RIGHTS SET FORTH IN PENNSYLVANIA MUNICIPALITIES PLANNING CODE SECTION 705 AND SHALL CONTAIN A PROVISION STATING THAT SUCH PROVISIONS CANNOT BE CHANGED WITHOUT THE PRIOR WRITTEN CONSENT OF MOUNT JOY TOWNSHIP.
3. NOTHING ON THIS PLAN SHALL BE INTERPRETED AS BEING A COMMITMENT OF MOUNT JOY TOWNSHIP TO ACCEPT DEDICATION OF ANY STREET OR OTHER IMPROVEMENT. NOTWITHSTANDING THE FOREGOING, MOUNT JOY TOWNSHIP MAY ACCEPT DEDICATION OF ANY STREET OR OTHER DEDICATED IMPROVEMENT SHOWN ON THIS PLAN.

FLOOD PLAIN NOTES

1. AREAS IDENTIFIED AS 100-YR FLOODPLAIN WERE DELINEATED USING THE GEOHECRAS SOFTWARE BASED ON AVAILABLE LIDAR AND SURVEY INFORMATION, AND ARE BASED ON THE FLOODPLAIN ANALYSIS REPORT PREPARED BY RGS ASSOCIATES DATED DECEMBER 13, 2021.
2. THE FLOODWAY SHALL BE KEPT FREE OF STRUCTURES, FILL AND OTHER ENCROACHMENTS.
3. WORK IN THE 100 YEAR FLOODPLAIN OF BOTH THE UNNAMED TRIBUTARIES TO CONOY CREEK LOCATED ON SITE. ALL WORK WITHIN THESE FLOODPLAINS HAVE BEEN DOCUMENTED AND SUBMITTED TO THE TOWNSHIP AND THE LANCASTER COUNTY CONSERVATION DISTRICT IN ORDER TO OBTAIN THE NECESSARY LOCAL, STATE, AND FEDERAL APPROVALS FOR THE WORK PROPOSED.

WETLAND NOTES

1. WETLANDS DELINEATED ON THE PLANS SHALL BE KEPT FREE OF STRUCTURES, FILL AND OTHER ENCROACHMENTS. NO DISTURBANCE SHALL OCCUR WITHIN THE BOUNDARY OF THE WETLANDS.
2. IN APRIL 21, 2021 A PRELIMINARY WETLANDS INVESTIGATION AND A FIELD SURVEY TO DETERMINE THE EXTENT OF WETLANDS PRESENT ON THE SITE WAS CONDUCTED BY VORTEX ENVIRONMENTAL, INC. THERE ARE TEN (10) REGULATED FEATURES THAT EXIST WITH THE APPROXIMATELY 126.5 ACRE STUDY AREA FOR CAMPUS ROAD, CONSISTING OF THREE (3) WATERCOURSES (WATERCOURSE 1-3) AND SEVEN (7) ASSOCIATED WETLAND AREAS.

EROSION AND SEDIMENT CONTROL NOTES

1. THE MEASURES REQUIRED IN THE APPROVED EROSION AND SEDIMENTATION CONTROL PLAN SHALL APPLY AS IF SHOWN ON THIS PLAN. THESE MEASURES SHALL BE COMPLETED AND IN SERVICE PRIOR TO THE COMMENCEMENT OF ANY SITE WORK OR CONSTRUCTION, PER THE SEQUENCE OF CONSTRUCTION OUTLINED ON THE APPROVED EROSION AND SEDIMENT CONTROL PLANS.
2. SOIL TYPES PRESENT ON THE SITE, PER THE SOIL SURVEY OF LANCASTER COUNTY, PENNSYLVANIA ARE AS FOLLOWS:

SYMBOL	NAME	SLOPE	HYDRO GROUP
AbA	ABBOTTSTOWN SILT LOAM	3-8%	D
Bo	BOWMANSVILLE SILT LOAM	0-3%	C/D
BuC	BUCKS SILT LOAM	8-15%	B
LaB	LANDSDALE SILT LOAM	3-8%	B
LaC	LANDSDALE SILT LOAM	8-15%	B
LaD	LANDSDALE SILT LOAM	15-25%	B
MbB	MOUNT LUCAS SILT LOAM	3-8%	C/D
RaB	READINGTON SILT LOAM	3-8%	C
UaB	UNGERS LOAM	3-8%	B

STREET NOTES

1. THE OWNER/DEVELOPER IS RESPONSIBLE FOR ENSURING THAT DEEDS TO ALL LOTS WHICH CONTAIN CLEAR SIGHT TRIANGLES AND LINE OF SIGHT EASEMENTS SHALL PROVIDE THAT NO STRUCTURE, PLANTINGS, OR GRADING SHALL BE ERECTED, INSTALLED, OR PERFORMED WITHIN THE AREA OF THE CLEAR SIGHT TRIANGLE WHICH WILL OBSCURE THE VISION OF MOTORISTS.
2. SPEED LIMIT SHALL BE POSTED AT 25 MILES PER HOUR EXCEPT WHERE OTHERWISE NOTED ON THE LAYOUT PLAN.
3. DESIGN AND PLACEMENT OF TRAFFIC SIGNS SHALL FOLLOW THE REQUIREMENTS SPECIFIED IN PADOT PUBLICATION 236, HANDBOOK OF APPROVED SIGNS, AND PADOT PUBLICATION 201, ENGINEERING AND TRAFFIC STUDIES.

GRADING NOTES

1. THE GARAGE FLOOR ELEVATIONS (GFE) SHOWN ON THE PLAN REPRESENT THE ELEVATION AT THE GARAGE DOOR OPENING.
2. THE CONTRACTOR AND/OR BUILDER SHALL CONFIRM ALL ELEVATION RELATIONSHIPS PRIOR TO CONSTRUCTION. ANY DISCREPANCIES SHALL BE SUBMITTED TO RGS ASSOCIATES IMMEDIATELY.
3. THE LOT GRADING AND GARAGE FLOOR ELEVATION (GFE) SHOWN FOR EACH RESIDENTIAL BUILDING IS SHOWN FOR FEASIBILITY PURPOSES ONLY.
4. THE SINGLE FAMILY HOMES HAVE BEEN GRADED TO SHOW CONCEPTUAL PAD GRADING WITH APPROXIMATE GARAGE FLOOR ELEVATIONS (GFE'S). THE INDIVIDUAL LOT GRADING CAN BE REVISED FOR EACH HOME, ASSUMING THE CONTRACTOR AND HOME BUILDER ARE RESPONSIBLE FOR MAINTAINING THE OVERALL DRAINAGE PATTERNS SHOWN ON THESE PLANS. ANY REVISIONS SHALL BE REFLECTED IN THE BUILDING PERMIT APPLICATION.
5. THE CONTRACTOR AND HOME BUILDER ARE RESPONSIBLE FOR MAINTAINING POSITIVE DRAINAGE AWAY FROM ALL BUILDINGS.
6. THE FINISHED GRADE (FG) ELEVATION AROUND EACH BUILDING FOUNDATION MUST BE A MINIMUM OF EIGHT (8) INCHES LOWER THAN THE FFE, OR PROVIDE THE MINIMUM SEPARATION DISTANCE REQUIRED BY THE LOCAL BUILDING CODE.
7. ALL PERVIOUS SURFACES SHALL BE GRADED AWAY FROM THE PROPOSED BUILDINGS AT A MINIMUM FIVE (5) PERCENT FOR THE FIRST TEN (10) FEET, OR AS REQUIRED BY THE LOCAL BUILDING CODE.
8. ALL IMPERVIOUS SURFACES SHALL BE GRADED AWAY FROM THE PROPOSED BUILDINGS AT A MINIMUM TWO (2) PERCENT FOR THE FIRST TEN (10) FEET, OR AS REQUIRED BY THE LOCAL BUILDING CODE.
9. ALL FINISHED FLOOR ELEVATIONS MUST BE SET A MINIMUM OF TWO (2) FEET ABOVE THE 100 YEAR WATER SURFACE ELEVATION OF ANY ADJACENT STORMWATER FACILITY.
10. ALL FINISHED FLOOR ELEVATIONS MUST BE SET A MINIMUM OF TWO (2) FEET ABOVE THE 100 YEAR WATER SURFACE ELEVATION OF ANY ADJACENT 100-YEAR FLOODPLAIN.
11. THE PROPOSED SEWER MAIN HAS NOT BEEN DESIGNED TO ACCOMMODATE BASEMENT ELEVATIONS. THIS PLAN ASSUMES THAT GRAVITY SEWER LATERALS WILL ACCOMMODATE THE FIRST FLOOR OF THE BUILDINGS AND THAT BASEMENT SEWERS ARE NOT INTENDED.
12. THIS PLAN ASSUMES THAT ONLY HOMES NOTED WITH A BASEMENT FLOOR ELEVATION (BFE) WILL HAVE BASEMENTS.

GEOTECHNICAL NOTES

A. GENERAL RECOMMENDATIONS

1. IF REDOXIMORPHIC FEATURES (SOIL MOTTLING AND COLORATION PATTERNS FORMED BY THE REDUCTION OF IRON AND/OR MANGANESE FROM SATURATED CONDITIONS IN THE SOIL) ARE ENCOUNTERED:
   1.1. A QUALIFIED PROFESSIONAL SHOULD DETERMINE IF THE FEATURES OBSERVED ARE ASSOCIATED WITH A HISTORICAL CONDITION (ASSOCIATED WITH FILL, PREVIOUS SITE CONDITION, OR NATURAL COLORATION) OR ARE ASSOCIATED WITH CONDITIONS THAT COULD PRESENTLY OCCUR (SEASONAL VARIATIONS IN THE WATER TABLE).
   1.2. EVALUATE THE ELEVATION OF THE FEATURES RELATIVE TO THE PROPOSED DESIGN ELEVATION OF THE SWM FEATURE AND DETERMINE IF THE SIZE AND ELEVATION OF THE SWM FEATURE CAN BE ADJUSTED TO ALLEVIATE THE CONFLICT.
   1.3. RETAIN ECS AND CIVIL ENGINEER TO EVALUATE ALTERNATE DESIGN CONCEPTS. ALTERNATE DESIGNS PROPOSED BY THE PROFESSIONAL SHOULD BE SEALED AND SUBMITTED TO THE TOWNSHIP FOR APPROVAL.
2. IF THE FIELD VERIFIED INFILTRATION RATES ARE EXCESSIVELY HIGH (GREATER THAN 6 INCHES PER HOUR):
   2.1. DETERMINE THE EXTENT OF THE MATERIALS EXHIBITING THE HIGH INFILTRATION RATES THROUGH A COMBINATION OF VISUAL-MANUAL CLASSIFICATION, HAND PROBING, DENSITY TESTING, OR OTHER SUITABLE METHODS AS DETERMINED BY ECS.
   2.2. OVEREXCAVATE THE MATERIALS TO THE DEPTH WHERE THE MATERIAL TYPE CHANGES OR A MAXIMUM DEPTH OF 2 FEET, WHICHEVER IS ENCOUNTERED FIRST.
   2.3. IF EXCESSIVE RATES ARE ASSOCIATED WITH WEATHERED OR BROKEN ROCK, THE ROCK SURFACE SHOULD BE EXAMINED BY ECS, PRIOR TO REPLACEMENT OF SUITABLE MATERIAL.
   2.4. REPLACE THE EXCAVATED MATERIAL WITH FINER GRADED MATERIALS APPROVED BY ECS. SUITABLE SOIL MIXTURES CAN CONSIST OF A BLEND OF ON-SITE AND/OR OFF-SITE MATERIALS AVAILABLE TO THE CONTRACTOR GENERALLY CONFORMING TO THE TABLE PROVIDED IN THE GEOTECHNICAL REPORT, WITH FIELD INFILTRATION RATES POST PLACEMENT DETERMINED AND APPROVED BY ECS.
   2.5. MATERIALS SHOULD BE LIGHTLY TRACKED INTO PLACE IN NON-STRUCTURAL AREAS.
   2.6. IF MATERIAL REPLACEMENT IS REQUIRED IN STRUCTUR

PROPERTY LEGEND					
TRACT	NAME	ADDRESS	PARCEL	DEED	PLAN
1	CRICK JOAN L	620 GROFF AVE	2506680200000	05437404	J-008-035
2	LAWTON WAYNE D & MARY LOU	624 GROFF AVE	2507275400000	3108527	J-008-035
3	CAUDILL STEVEN R & HEATHER J	630 GROFF AVE	2507760000000	6553343	J-008-035
4	BAUM MICHAEL G	632 GROFF AVE	2508333400000	05578039	J-008-035
5	JXZ REALTY LLC	638 GROFF AVE	2508877400000	6769429	J-008-035
6	SDR PROPERTY MANAGEMENT LLC	644 GROFF AVE	2509350900000	6749967	J-008-035
7	COOVER KATIE L	648 GROFF AVE	2509864500000	6692780	J-008-035
8	NESLUND SEAN C	654 GROFF AVE	2500368400000	6001780	J-008-035
9	MCDONALD KATHRYN JANE	660 GROFF AVE	2500962700000	05751390	J-008-035
10	SCHULTZ DIANE M	720 GROFF AVE	2501568400000	6633013	J-017-046
11	CLOUSER MATTHEW R	726 GROFF AVE	2502164500000	5072673	J-017-046
12	CRIBBS JOSHUA D & REBECCA R	732 GROFF AVE	2502700700000	6693623	J-017-046
13	GINGRICH QUINN	738 GROFF AVE	2503197000000	6753058	J-017-046
14	YEAGER RICHARD B JR & DAWN L	744 GROFF AVE	2503683400000	4522247	J-017-046
15	DYER HARRY G & JANET M	750 GROFF AVE	2504169600000	0-520494	J-017-046
16	WILLIAMS PATRICE DIANNE	756 GROFF AVE	2504656000000	6006491	J-017-046
17	WARFEL W ANDREW P	762 GROFF AVE	2505142400000	6433-248	J-022-029
18	KOETZLE RICHARD A	768 GROFF AVE	2505638800000	5233890	J-022-029
19	SCHEAFFER DEAN R & DOROTHY M	830 GROFF AVE	2506085200000	6306-535	J-122-097
20	STABLEY WILLIAM D	840 GROFF AVE	2506824500000	6174719	J-122-097
21	SPLAIN RONALD L	850 GROFF AVE	2507330800000	5980507	J-122-097
22	RAILING DENNIS E	928 GROFF AVE	2507918900000	5141668	J-023-030
23	SPINKS ANDREWS B & MARION	1441 CAMPUS RD	4609317700000	3011252	J-028-001
24	SCHMIDT MEGHAN	1453 CAMPUS RD	4600193300000	6155796	J-028-001
25	HALTER MELISSA M	1465 CAMPUS RD	4600897700000	6260514	J-028-001
26	WRIGHT JAMES B	1479 CAMPUS RD	4601661400000	5020859	J-028-001
27	BEAMENDERFER WILLIAM J & LORI	1489 CAMPUS RD	4602425500000	6447375	J-028-001
28	HERSHEY JOHN I	1501 CAMPUS RD	4603477000000	05414453	J-028-001
29	HEISEY JAMES E	1529 CAMPUS RD	4604567300000	5098696	J-116-071
30	HILE JOSEPH LOU & KELSEY D	1535 CAMPUS RD	4605340500000	6478030	J-116-071
31	NOLL J KEVIN	1554 CAMPUS RD	4604735900000	6438552	J-049-029
32	SHARP EUGENE J & JEAN M	1582 CAMPUS RD	4605592200000	K-620815	J-049-029
33	DICE JOHN W & CHRISTINE G	2102 SHEAFFER RD	4606215500000	6654542	J-049-029
34	MANGAT GURDIP & SANDEEP	2122 SHEAFFER RD	4606086900000	6745245	J-049-029
35	SWARTLEY DANA & KERRY	2158 SHEAFFER RD	4605907800000	6629397	J-049-029
36	BOYER SELENA L	2164 SHEAFFER RD	4605974100000	6397260	J-049-029
37	AXE TIMOTHY G & SUSAN	111 WOODLAND AVE	4602045500000	5687/422	
38	JACOBY KEVIN R	105 WOODLAND AVE	4600711300000	05411366	
39	ORTIZ JERRY LUIS	103 WOODLAND AVE	4600879800000	6344952	
40	DAVIDSON RYAN M	101 WOODLAND AVE	4608254900000	6291469	
41	ROTH RYAN & ADRIENNE N	99 WOODLAND AVE	4607024000000	6733762	
42	PLF PROPERTIES LLC	1593 S MOUNT JOY ST	2505451500000	05556998	J-223-122
43	HEISTAND DONALD L	24 GREENLEAF LN	2503867900000	05717730	J-170-077
44	SKAGGS DALE R & HOLLY E	994 GROFF AVE	4603941000000	6168493	
45	MILLER RALPH P & RONDA O	1000 RIDGE RD	4605472100000	6393145	J-020-048
46	LEVOSKY THOMAS D & PATRICIA A	1050 CAMPUS RD	4602507400000	3199687	
47	CAMPUS VIEW LP	RIDGE RD	4604428800000	5872696	J-138-102

SOILS LEGEND

SYMBOL	NAME	SLOPE	HYDRO GROUP
AbB	ABBOTTSTOWN SILT LOAM	3-8%	D
Bo	BOWMANSVILLE SILT LOAM	0-3%	C/D
BuC	BUCKS SILT LOAM	8-15%	B
LaB	LANSDALE LOAM	3-8%	B
LaC	LANSDALE LOAM	8-15%	B
LaD	LANSDALE LOAM	15-25%	B
MdB	MOUNT LUCAS SILT LOAM	3-8%	C/D
RaB	READINGTON SILT LOAM	3-8%	C
UaB	UNGERS LOAM	3-8%	B

SITE FEATURE LEGEND

EXISTING FEATURE TO BE REMOVED
T.B.R. = TO BE REMOVED

STEEP SLOPE LEGEND

SLOPES 15-25%

SLOPES GREATER THAN 25%

EXISTING WOODLANDS

EXISTING WOODLANDS:	24.226 AC.
EXISTING WOODLANDS TO BE REMOVED:	8.004 AC. (33.0%)
EXISTING WOODLANDS TO REMAIN:	16.222 AC. (67.0%)

NORTH

L1	N51°30'07"W	115.69'	
L2	N51°30'07"W	51.34'	
L3	N51°30'07"W	159.77'	
L4	S52°14'38"E	138.07'	
L5	N37°27'04"E	74.00'	
L6	S52°14'38"E	138.47'	

C1	12.00'	18.91'	S82°36'13"W	17.02'
C2	12.00'	18.79'	S07°23'47"E	16.93'

NOT FOR BUILDING/NOT FOR CONSTRUCTION

MANAGER:	CHRIS VENARCHICK
DESIGN BY:	NGG
CHECKED BY:	CV
DRAWN BY:	NGG
CHECKED BY:	CV

CLIENT
1376 CAMPUS ROAD ASSOCIATES, LLC
ONE TOWER BRIDGE
100 FRONT STREET, SUITE 560
WEST CONSHOHOCKEN, PA 19428
(571) 276-3184

SCALE: 1" = 150' (450' / 300' / 150' / 0')

PROJECT TITLE
1376 CAMPUS ROAD - PHASE 2
FINAL SUBDIVISION &
LAND DEVELOPMENT PLAN
MOUNT JOY TOWNSHIP — LANCASTER COUNTY, PA.

SHEET TITLE
EXISTING CONDITIONS & DEMOLITION PLAN

NO	BY	DATE	REVISION

SEAL

SEAL

Land Planning
Landscape Architecture
Civil Engineering
53 West James Street
Suite 101, Lancaster, PA 17603
(717) 715-1396 FAX: (717) 435-8277
221 W. Philadelphia Street
Suite 108E, York, PA 17401
(717) 854-3805
320 N. Market Street
Suite 550W, Harrisburg, PA 17101
(717) 599-7615
E-mail: info@rgsassociates.com
www.rgsassociates.com

RGS ASSOCIATES

DATE: OCTOBER 24, 2024
PROJECT NO.: 2024J13-001

SHEET NO.: 3 OF 34

PLOTTED: Thursday, October 24, 2024 @ 09:02AM
SUBDIVISION SCR
FILENAME: P:\2024\2024J13-001\CADD\FINAL PH2\Plot\Z-Exist-Demo.dwg
XREFS: Titleblock; Demolition; EG; Soils; Existing-GIS; EG-Lidar; Floodplain; Existing; EG-Slopes; Subdivision Phase 1A
IMAGES:

PROPERTY LEGEND					
TRACT	NAME	ADDRESS	PARCEL	DEED	PLAN
1	CRICK JOAN L	620 GROFF AVE	2506680200000	05437404	J-008-035
2	LAWTON WAYNE D & MARY LOU	624 GROFF AVE	2507275400000	3108527	J-008-035
3	CAUDILL STEVEN R & HEATHER J	630 GROFF AVE	2507760000000	6553343	J-008-035
4	BAUM MICHAEL G	632 GROFF AVE	2508333400000	05578039	J-008-035
5	JXZ REALTY LLC	638 GROFF AVE	2508877400000	6769429	J-008-035
6	SDR PROPERTY MANAGEMENT LLC	644 GROFF AVE	2509350900000	6749967	J-008-035
7	COOVER KATIE L	648 GROFF AVE	2509864500000	6692780	J-008-035
8	NESLUND SEAN C	654 GROFF AVE	2500368400000	6001780	J-008-035
9	MCDONALD KATHRYN JANE	660 GROFF AVE	2500962700000	05751390	J-008-035
10	SCHULTZ DIANE M	720 GROFF AVE	2501568400000	6633013	J-017-046
11	CLOUSER MATTHEW R	726 GROFF AVE	2502164500000	5722673	J-017-046
12	CRIBBS JOSHUA D & REBECCA R	732 GROFF AVE	2502700700000	6693623	J-017-046
13	GINGRICH QUINN	738 GROFF AVE	2503197000000	6753058	J-017-046
14	YEAGER RICHARD B JR & DAWN L	744 GROFF AVE	2503683400000	4522247	J-017-046
15	DYER HARRY G & JANET M	750 GROFF AVE	2504169600000	0-520494	J-017-046
16	WILLIAMS PATRICE DIANNE	756 GROFF AVE	2504656000000	6006491	J-017-046
17	WARFEL W ANDREW P	762 GROFF AVE	2505142400000	6633-248	J-022-029
18	KOETZLE RICHARD A	768 GROFF AVE	2505638800000	5233890	J-022-029
19	SCHEAFFER DEAN R & DOROTHY M	830 GROFF AVE	2506085200000	6306-535	J-122-097
20	STABLEY WILLIAM D	840 GROFF AVE	2506824500000	6174719	J-122-097
21	SPLAIN RONALD L	850 GROFF AVE	2507330800000	5980507	J-122-097
22	RAILING DENNIS E	928 GROFF AVE	2507918900000	5141668	J-023-030
23	SPINKS ANDREWS B & MARION	1441 CAMPUS RD	4609317700000	3011252	J-028-001
24	SCHMIDT MEGHAN	1453 CAMPUS RD	4600193300000	6155796	J-028-001
25	HALTER MELISSA M	1465 CAMPUS RD	4600897700000	6260514	J-028-001
26	WRIGHT JAMES B	1479 CAMPUS RD	4601661400000	5020859	J-028-001
27	BEAMENDERFER WILLIAM J & LORI	1489 CAMPUS RD	4602425500000	6447375	J-028-001
28	HERSHEY JOHN I	1501 CAMPUS RD	4603477000000	05414453	J-028-001
29	HEISEY JAMES E	1529 CAMPUS RD	4604567300000	5098696	J-116-071
30	HILE JOSEPH LOU & KELSEY D	1535 CAMPUS RD	4605340500000	6478030	J-116-071
31	NOLL J KEVIN	1554 CAMPUS RD	4604735900000	6438552	J-049-029
32	SHARP EUGENE J & JEAN M	1582 CAMPUS RD	4605592200000	K-620815	J-049-029
33	DICE JOHN W & CHRISTINE G	2102 SHEAFFER RD	4606215500000	6654542	J-049-029
34	MANGAT GURDIP & SANDEEP	2122 SHEAFFER RD	4606086900000	6745245	J-049-029
35	SWARTLEY DANA & KERRY	2158 SHEAFFER RD	4605907800000	6629397	J-049-029
36	BOYER SELENA L	2164 SHEAFFER RD	4605974100000	6397260	J-049-029
37	AXE TIMOTHY G & SUSAN	111 WOODLAND AVE	4602045500000	5687/422	
38	JACOBY KEVIN R	105 WOODLAND AVE	4600711300000	05411366	
39	ORTIZ JERRY LUIS	103 WOODLAND AVE	4600879800000	5344952	
40	DAVIDSON RYAN M	101 WOODLAND AVE	4608254900000	6291469	
41	ROTH RYAN & ADRIENNE N	99 WOODLAND AVE	4607024000000	6737762	
42	PLF PROPERTIES LLC	1593 S MOUNT JOY ST	2505451500000	05556998	J-223-122
43	HEISTAND DONALD L	24 GREENLEAF LN	2503867900000	05717730	J-170-077
44	SKAGGS DALE R & HOLLY E	994 GROFF AVE	4603941000000	6168493	
45	MILLER RALPH P & RONDA O	1000 RIDGE RD	4605472100000	6393145	J-020-048
46	LEVOSKY THOMAS D & PATRICIA A	1050 CAMPUS RD	4602507400000	3199687	
47	CAMPUS VIEW LP	RIDGE RD	4604428800000	5872696	J-138-102

DENSITY HATCH LEGEND

APARTMENT AREA

SINGLE-FAMILY AREA

NORTH

HAMPDEN ROAD

GROFF AVENUE

CAMPUS ROAD (T-887)

(R1) - RESIDENTIAL

(R) - RURAL

(R2) - MEDIUM DENSITY RESIDENTIAL

(INS) - INSTITUTIONAL

(RI) - RESIDENTIAL

ELIZABETHTOWN BOROUGH

MOUNT JOY TOWNSHIP

WOODLAND AVENUE

RIDGEVIEW AVENUE

BRIARCLIFF ROAD

GREENLEAF LANE

SHEAFFER ROAD (T-888)

(RI) - RESIDENTIAL
(C-OI) - OFFICE
INDUSTRIAL
PARK

N/F
MATESEVAC THOMAS S
1241 CAMPUS RD
ACCOUNT: 4604794600000
DEED: 6366570
PLAN: J-023-030

N/F
CHIOSI, LLC & SCHIAVONI, LTD.
1925 SHEAFFER RD
ACCOUNT: 4607171800000
DEED: 6686431

N/F
KING DANIEL B
1241 CAMPUS RD
ACCOUNT: 4604794600000
DEED: 6560192
PLAN: J-023-030

N/F
RAFFENSPERGER DANIEL H
2360 SHEAFFER RD
ACCOUNT: 4606174400000
DEED: 5683/007
PLAN: 2019-0492-J

UNT TO CONOY CREEK

PROPOSED 100-YEAR FLOODPLAIN

APARTMENT LOT 9
176 APARTMENT UNITS

32 UNIT BUILDINGS:
(20,000 SF + (29 X 6,000 SF))
194,000 SF REQUIRED

24 UNIT BUILDINGS:
((20,000 SF + (21 X 6,000 SF)) X 6)
876,000 SF REQUIRED

1,070,000 SF LOT AREA REQUIRED TOTAL
1,082,312 SF LOT AREA PROVIDED TOTAL

LOT 9: 24.85 ACRES
LOT 9 DENSITY: 7.08 UNITS PER ACRE

SEE PLANS PREPARED BY TRAFFIC PLANNING AND DESIGN, INC FOR THE LAYOUT, GRADING AND STORMWATER DESIGN ASSOCIATED WITH THE CAMPUS ROAD ROUNDABOUT

RIGHT-OF-WAY LINE

41.5' R/W

33' R/W

60' R/W

50' R/W

LOT 1 (CLUBHOUSE)

LOT 2

LOT 3

LOT 4

LOT 5

LOT 6

LOT 7

LOT 8

LOT 9

LOT 10

LOT 11

LOT 12

LOT 13

PHASE 1A
PHASE 1B
PHASE 2
PHASE 3
PHASE 4

TAVIN WAY
BRUELLE DRIVE
CHANNEL DRIVE

BMP-001
BMP-002
BMP-003
BMP-004
BMP-005
BMP-006
BMP-007
BMP-008
BMP-009
BMP-010
BMP-011
BMP-012
BMP-013
BMP-014
BMP-015

BUILDING 1A (APARTMENTS)
BUILDING 1B (APARTMENTS)
BUILDING 2A (APARTMENTS)
BUILDING 2B (APARTMENTS)
BUILDING 3A (APARTMENTS)
BUILDING 3B (APARTMENTS)
BUILDING 4A (APARTMENTS)
BUILDING 4B (APARTMENTS)
BUILDING 5A (APARTMENTS)
BUILDING 5B (APARTMENTS)
BUILDING 6A (APARTMENTS)
BUILDING 6B (APARTMENTS)
BUILDING 7A (APARTMENTS)
BUILDING 7B (APARTMENTS)
BUILDING 8A (APARTMENTS)
BUILDING 8B (APARTMENTS)
BUILDING 9A (APARTMENTS)
BUILDING 9B (APARTMENTS)
BUILDING 10 (APARTMENTS)

UNT TO CONOY CREEK
PROPOSED 100-YEAR FLOODPLAIN

SINGLE-FAMILY AREA: 88.04 ACRES

PHASE 1A & 2 UNITS: 97 UNITS
PHASE 1A & 2 DENSITY: 1.10 DWELLING UNITS PER ACRE

FULL BUILD UNITS: 209 UNITS
FULL BUILD DENSITY: 2.37 DWELLING UNITS PER ACRE

APARTMENT LOT 1
104 APARTMENT UNITS

32 UNIT BUILDINGS:
(20,000 SF + (29 X 6,000 SF))
194,000 SF REQUIRED

24 UNIT BUILDINGS:
((20,000 SF + (21 X 6,000 SF)) X 3)
438,000 SF REQUIRED

632,000 SF LOT AREA REQUIRED
637,512 SF LOT AREA PROVIDED

LOT 1: 14.64 ACRES
LOT 1 DENSITY: 7.10 UNITS PER ACRE

NOT FOR BUILDING/NOT FOR CONSTRUCTION

NO	BY	DATE	REVISION

SEAL

SEAL

MANAGER: CHRIS VENARCHICK

DESIGN BY:	CHECKED BY:
NGG	CV
DRAWN BY:	CHECKED BY:
NGG	CV

SCALE
1" = 150'
0' 150' 300' 450'

CLIENT
1376 CAMPUS ROAD ASSOCIATES, LLC
ONE TOWER BRIDGE
100 FRONT STREET, SUITE 560
WEST CONSHOHOCKEN, PA 19428
(571) 276-3184

PROJECT TITLE
1376 CAMPUS ROAD - PHASE 2
FINAL SUBDIVISION &
LAND DEVELOPMENT PLAN
MOUNT JOY TOWNSHIP LANCASTER COUNTY, PA.

SHEET TITLE
OVERALL SITE, PHASING, & DENSITY PLAN

Land Planning
Landscape Architecture
Civil Engineering
53 West James Street
Suite 101, Lancaster, PA 17603
(717) 715-1396 Fax: (717) 435-8277
221 W. Philadelphia Street
Suite 108E, York, PA 17401
(717) 854-3450
320 N. Market Street
Suite 550W, Harrisburg, PA 17101
(717) 599-7615
E-mail: info@rgsassociates.com
www.rgsassociates.com

RGS ASSOCIATES

DATE: OCTOBER 24, 2024
PROJECT NO.: 2024J13-001

SHEET NO.: 4 OF 34

PLOTTED: Thursday, October 24, 2024 @ 09:03AM
SUBDIVISION SCR
FILENAME: P:\2024\2024J13-001\CADD\FINAL PH2\Plot\Z-Overall-Site.dwg
XREFS: Existing;Layout;Titleblock;Layout-HOP;Existing-GIS;Floodplain
IMAGES:

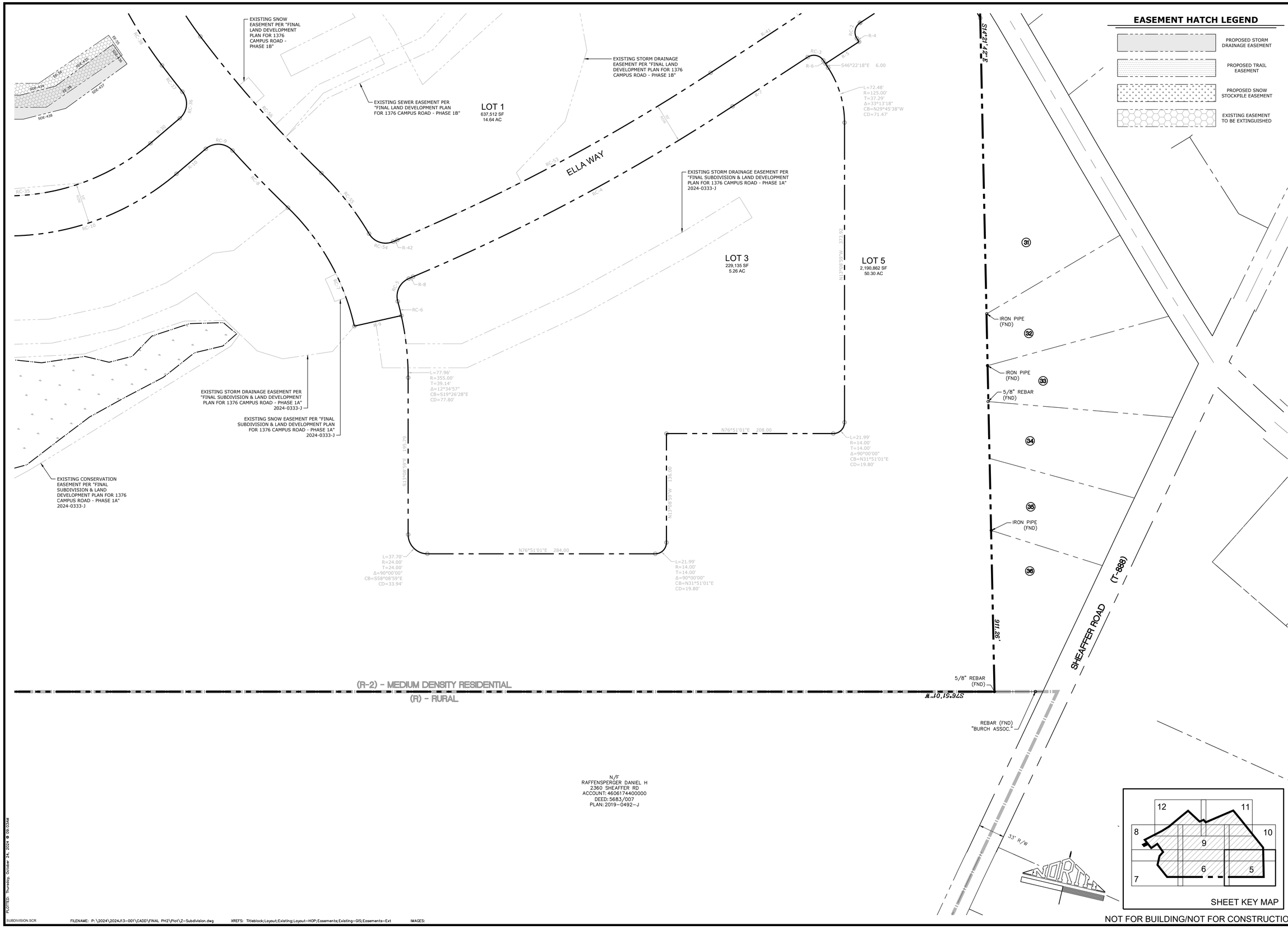

NOT FOR BUILDING/NOT FOR CONSTRUCTION

NO	BY	DATE	REVISION

SEAL

SEAL

MANAGER: CHRIS VENARCHICK
DESIGN BY: NGG
CHECKED BY: CV
DRAWN BY: NGG
CHECKED BY: CV

CLIENT
1376 CAMPUS ROAD ASSOCIATES, LLC
ONE TOWER BRIDGE
100 FRONT STREET, SUITE 560
WEST CONSHOHOCKEN, PA 19428
(571) 276-3184

SCALE
1" = 50'
0' 50' 100' 150'

PROJECT TITLE
1376 CAMPUS ROAD - PHASE 2
FINAL SUBDIVISION & LAND DEVELOPMENT PLAN
MOUNT JOY TOWNSHIP LANCASTER COUNTY, PA.

SHEET TITLE
SUBDIVISION & EASEMENT PLAN

Land Planning
Landscape Architecture
Civil Engineering
53 West James Street
Suite 101, Lancaster, PA 17603
(717) 715-1396 FAX: (717) 435-8277
221 W. Philadelphia Street
Suite 108E, York, PA 17401
(717) 854-3910
320 N. Market Street
Suite 550W, Harrisburg, PA 17101
(717) 599-7615
E-mail: info@rgsassociates.com
www.rgsassociates.com
RGS ASSOCIATES

DATE: OCTOBER 24, 2024
PROJECT NO.: 2024J13-001

SHEET NO.: 5 OF 34

PLOTTED: Thursday, October 24, 2024 @ 09:03AM

SUBDIVISION.SCR FILENAME: P:\2024\2024J13-001\CADD\FINAL PH2\Plot\Z-Subdivision.dwg XREFS: Titleblock;Layout;Existing;Layout-HOP;Easements;Existing-GIS;Easements-Ext IMAGES:

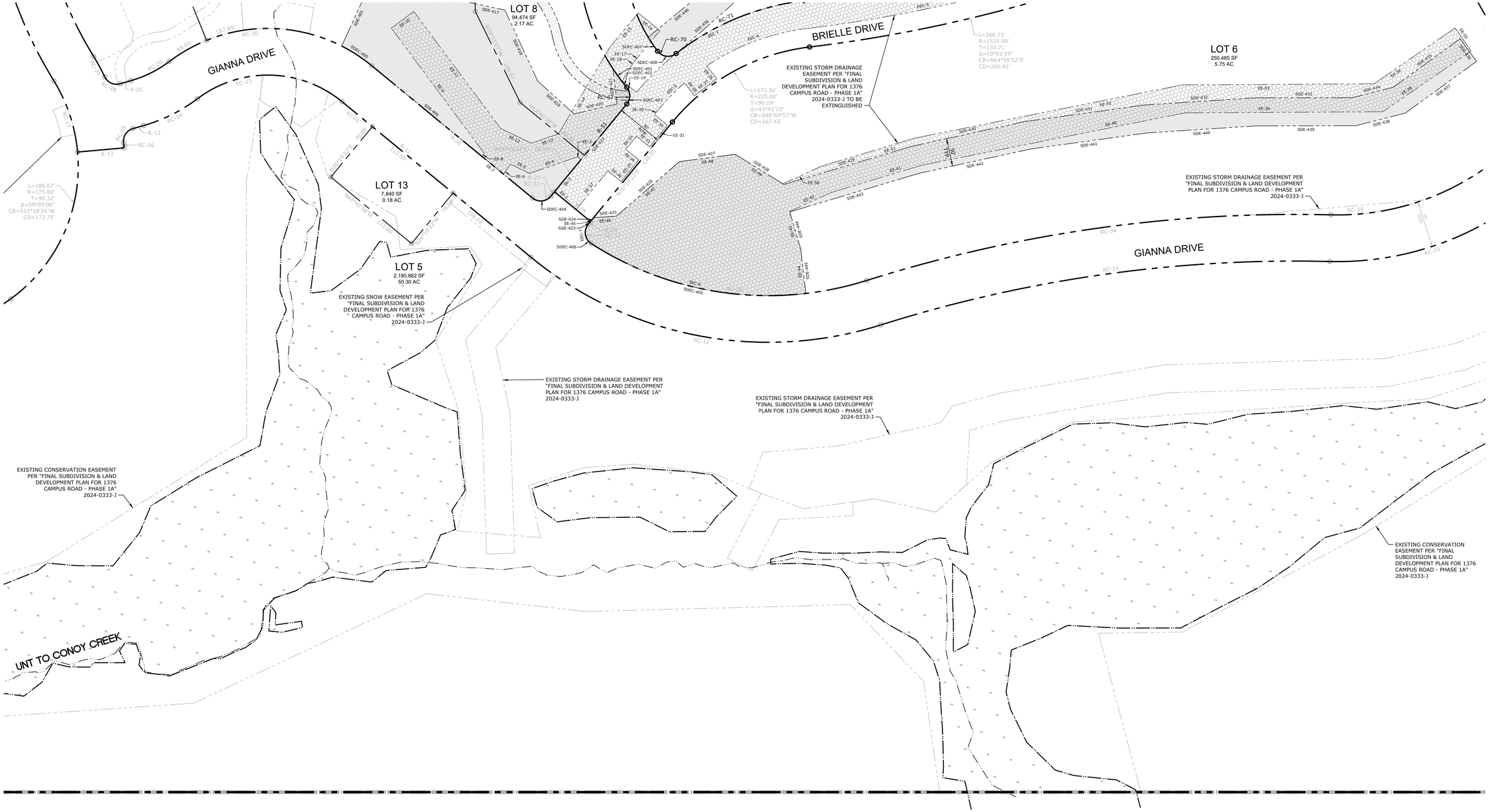

N/F
RAFFENSPERGER DANIEL H
2360 SHEAFFER RD
ACCOUNT: 4606174400000
DEED: 5683/007
PLAN: J-181-133

EASEMENT HATCH LEGEND

- PROPOSED STORM DRAINAGE EASEMENT
- PROPOSED TRAIL EASEMENT
- PROPOSED SNOW STOCKPILE EASEMENT
- EXISTING EASEMENT TO BE EXTINGUISHED

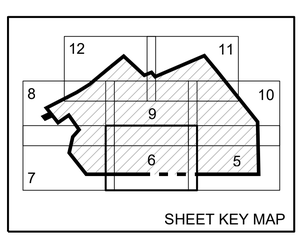

SHEET KEY MAP

NOT FOR BUILDING/NOT FOR CONSTRUCTION

NO	BY	DATE	REVISION

SEAL

SEAL

MANAGER: CHRIS VENARCHICK
DESIGN BY: NGG | CHECKED BY: CV
DRAWN BY: NGG | CHECKED BY: CV

CLIENT
1376 CAMPUS ROAD ASSOCIATES, LLC
ONE TOWER BRIDGE
100 FRONT STREET, SUITE 560
WEST CONSHOHOCKEN, PA 19428
(571) 276-3184

SCALE
1" = 50'
0' 50' 100' 150'

PROJECT TITLE
1376 CAMPUS ROAD - PHASE 2
FINAL SUBDIVISION & LAND DEVELOPMENT PLAN
MOUNT JOY TOWNSHIP LANCASTER COUNTY, PA.

SHEET TITLE
SUBDIVISION & EASEMENT PLAN

Land Planning
Landscape Architecture
Civil Engineering
53 West James Street
Suite 101, Lancaster, PA 17603
(717) 715-1396 Fax (717) 435-8277
221 W. Philadelphia Street
Suite 108E, York, PA 17401
(717) 854-3805
320 N. Market Street
Suite 550W, Harrisburg, PA 17101
(717) 599-7615
E-mail: info@rgsassociates.com
www.rgsassociates.com
RGS ASSOCIATES

DATE: OCTOBER 24, 2024
PROJECT NO.: 2024J13-001
SHEET NO.: 6 OF 34

PLOTTED: Thursday, October 24, 2024 @ 09:03AM
SUBDIVISION.SCR
FILENAME: P:\2024\2024J13-001\CADD\FINAL PH2\Plot\Z-Subdivision.dwg
XREFS: Titleblock;Layout;Existing;Layout-HOP;Easements;Existing-GIS;Easements-Ext
IMAGES:

NOT FOR BUILDING/NOT FOR CONSTRUCTION

NO	BY	DATE	REVISION

SEAL

SEAL

MANAGER: CHRIS VENARCHICK

DESIGN BY:	CHECKED BY:
NGG	CV
DRAWN BY:	CHECKED BY:
NGG	CV

CLIENT
1376 CAMPUS ROAD ASSOCIATES, LLC
ONE TOWER BRIDGE
100 FRONT STREET, SUITE 560
WEST CONSHOHOCKEN, PA 19428
(571) 276-3184

SCALE
1" = 50'
0' 50' 100' 150'

PROJECT TITLE
1376 CAMPUS ROAD - PHASE 2
FINAL SUBDIVISION & LAND DEVELOPMENT PLAN
MOUNT JOY TOWNSHIP LANCASTER COUNTY, PA.

SHEET TITLE
SUBDIVISION & EASEMENT PLAN

Land Planning
Landscape Architecture
Civil Engineering
53 West James Street
Suite 101, Lancaster, PA 17603
717.715.1396 FAX: 717.435.8277
221 W. Philadelphia Street
Suite 108E, York, PA 17401
717.854.3835
320 N. Market Street
Suite 550W, Harrisburg, PA 17101
717.599.7615
E-mail: info@rgsassociates.com
www.rgsassociates.com
RGS ASSOCIATES

DATE: OCTOBER 24, 2024
PROJECT NO.: 2024J13-001

SHEET NO.: 7 OF 34

PLOTTED: Thursday, October 24, 2024 @ 09:03AM
SUBDIVISION.SCR
FILENAME: P:\2024\2024J13-001\CADD\FINAL PH2\Plot\Z-Subdivision.dwg
XREFS: Titleblock;Layout;Existing;Layout-HOP;Easements;Existing-GIS;Easements-Ext
IMAGES:

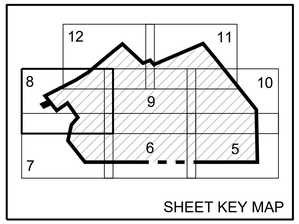

SHEET KEY MAP

NORTH

GROFF AVENUE

WOODLAND AVENUE

RIDGEVIEW AVENUE

BRIARCLIFF ROAD

SARAH DRIVE

ELIZABETHTOWN BOROUGH
MOUNT JOY TOWNSHIP

(RI) - RESIDENTIAL
(R-2) - MEDIUM DENSITY RESIDENTIAL

(R) - RURAL RESIDENTIAL
(R-2) - MEDIUM DENSITY RESIDENTIAL

LOT 5
2,190,862 SF
50.30 AC

LOT 12
176,748 SF
4.06 AC

LOT 10
169,214 SF
3.88 AC

LOT 11
194,856 SF
4.47 AC

REBAR (FND.)

IRON PIPE (FND.)

STONE (FND.)

N51°30'07"W 115.69'

N51°30'07"W 51.94'

N51°30'07"W 159.77'

S44°50'15"E 229.97'

S69°59'29"E 593.89'

N44°54'44"E 256.70'

N49°39'32"E

S44°50'15"E

N44°54'44"E

N28°16'16"E 166.10'

N00°33'14"W 283.12'

40' R/W

56' R/W

60' R/W

EXISTING STORM DRAINAGE EASEMENT PER "FINAL SUBDIVISION & LAND DEVELOPMENT PLAN FOR 1376 CAMPUS ROAD - PHASE 1A" 2024-0333-J

EXISTING SNOW EASEMENT PER "FINAL SUBDIVISION & LAND DEVELOPMENT PLAN FOR 1376 CAMPUS ROAD - PHASE 1A" 2024-0333-J

L=236.45'
R=375.00'
T=122.30'
Δ=36°07'36"
CB=S19°41'34"W
CD=232.55'

L=23.51'
R=14.00'
T=15.60'
Δ=96°12'07"
CB=S46°28'18"E
CD=20.84'

L=246.35'
R=2025.00'
T=123.33'
Δ=6°58'13"
CB=S88°54'45"W
CD=246.20'

N85°25'39"E 12.22

S85°25'39"W 12.22

L=23.51'
R=14.00'
T=15.60'
Δ=96°12'07"
CB=S37°19'35"W
CD=20.84'

L=240.27'
R=1975.00'
T=120.28'
Δ=6°58'13"
CB=S88°54'45"W
CD=240.12'

N87°36'08"W 10.72

N87°36'08"W 10.73

L=115.16'
R=375.00'
T=58.04'
Δ=17°35'41"
CB=S19°34'19"E
CD=114.71'

L=389.82'
R=775.00'
T=199.13'
Δ=28°49'09"
CB=N13°57'34"W
CD=385.72'

L=180.67'
R=175.00'
T=99.32'
Δ=59°09'06"
CB=S11°18'26"W
CD=172.75'

L=291.49'
R=150.00'
T=219.65'
Δ=111°20'25"
CB=S55°13'12"E
CD=247.74'

L=135.48'
R=275.00'
T=69.14'
Δ=28°13'37"
CB=N54°59'47"E
CD=134.11'

RC-20
R-16
R-14
RC-19
RC-25
RC-26
R-25
RC-27
RC-28
R-15
RC-29

EASEMENT HATCH LEGEND

- PROPOSED STORM DRAINAGE EASEMENT
- PROPOSED TRAIL EASEMENT
- PROPOSED SNOW STOCKPILE EASEMENT
- EXISTING EASEMENT TO BE EXTINGUISHED

NOT FOR BUILDING/NOT FOR CONSTRUCTION

NO	BY	DATE	REVISION

SEAL

SEAL

MANAGER: CHRIS VENARCHICK
DESIGN BY: NGG | CHECKED BY: CV
DRAWN BY: NGG | CHECKED BY: CV

CLIENT
1376 CAMPUS ROAD ASSOCIATES, LLC
ONE TOWER BRIDGE
100 FRONT STREET, SUITE 560
WEST CONSHOHOCKEN, PA 19428
(571) 276-3184

SCALE
1" = 50'
0' 50' 100' 150'

PROJECT TITLE
1376 CAMPUS ROAD - PHASE 2
FINAL SUBDIVISION & LAND DEVELOPMENT PLAN
MOUNT JOY TOWNSHIP LANCASTER COUNTY, PA.

SHEET TITLE
SUBDIVISION & EASEMENT PLAN

Land Planning
Landscape Architecture
Civil Engineering
53 West James Street
Suite 101, Lancaster, PA 17603
(717) 715-1396 FAX: (717) 435-8277
221 W. Philadelphia Street
Suite 108E, York, PA 17401
(717) 854-3823
320 N. Market Street
Suite 550W, Harrisburg, PA 17101
(717) 599-7615
E-mail: info@rgsassociates.com
www.rgsassociates.com

RGS ASSOCIATES

DATE: OCTOBER 24, 2024
PROJECT NO.: 2024J13-001

SHEET NO.: 8 OF 34

PLOTTED: Thursday, October 24, 2024 @ 09:03AM
SUBDIVISION.SCR
FILENAME: P:\2024\2024J13-001\CADD\FINAL PH2\Plot\Z-Subdivision.dwg
XREFS: Titleblock;Layout;Existing;Layout-HOP;Easements;Existing-GIS;Easements-Ext
IMAGES:

EASEMENT HATCH LEGEND

- PROPOSED STORM DRAINAGE EASEMENT
- PROPOSED TRAIL EASEMENT
- PROPOSED SNOW STOCKPILE EASEMENT
- EXISTING EASEMENT TO BE EXTINGUISHED

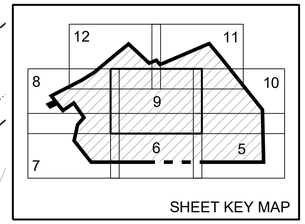

SHEET KEY MAP

NORTH

LOT 12
176,748 SF
4.06 AC

LOT 9
1,082,312 SF
24.85 AC

LOT 10
169,214 SF
3.88 AC

LOT 8
94,474 SF
2.17 AC

LOT 7
109,927 SF
2.52 AC

LOT 6
250,485 SF
5.75 AC

LOT 13
7,840 SF
0.18 AC

LOT 5
2,190,862 SF
50.30 AC

SARAH DRIVE

GIANNA DRIVE

TAVIN WAY

BRIELLE DRIVE

NATALIE DRIVE

UNT TO CONOY CREEK

EXISTING STORM DRAINAGE EASEMENT PER "FINAL SUBDIVISION & LAND DEVELOPMENT PLAN FOR 1376 CAMPUS ROAD - PHASE 1A" 2024-0333-J

EXISTING STORM DRAINAGE EASEMENT PER "FINAL SUBDIVISION & LAND DEVELOPMENT PLAN FOR 1376 CAMPUS ROAD - PHASE 1A" 2024-0333-J

EXISTING SNOW EASEMENT PER "FINAL SUBDIVISION & LAND DEVELOPMENT PLAN FOR 1376 CAMPUS ROAD - PHASE 1A" 2024-0333-J

EXISTING TRAIL EASEMENT PER "FINAL SUBDIVISION & LAND DEVELOPMENT PLAN FOR 1376 CAMPUS ROAD - PHASE 1A" 2024-0333-J

EXISTING STORM DRAINAGE EASEMENT PER "FINAL SUBDIVISION & LAND DEVELOPMENT PLAN FOR 1376 CAMPUS ROAD - PHASE 1A" 2024-0333-J

EXISTING CONSERVATION EASEMENT PER "FINAL SUBDIVISION & LAND DEVELOPMENT PLAN FOR 1376 CAMPUS ROAD - PHASE 1A" 2024-0333-J

EXISTING WATER EASEMENT PER "FINAL SUBDIVISION & LAND DEVELOPMENT PLAN FOR 1376 CAMPUS ROAD - PHASE 1A" 2024-0333-J

EXISTING TRAIL EASEMENT PER "FINAL SUBDIVISION & LAND DEVELOPMENT PLAN FOR 1376 CAMPUS ROAD - PHASE 1A" 2024-0333-J

EXISTING SNOW EASEMENT PER "FINAL SUBDIVISION & LAND DEVELOPMENT PLAN FOR 1376 CAMPUS ROAD - PHASE 1A" 2024-0333-J

EXISTING STORM DRAINAGE EASEMENT PER "FINAL SUBDIVISION & LAND DEVELOPMENT PLAN FOR 1376 CAMPUS ROAD - PHASE 1A" 2024-0333-J

EXISTING STORM DRAINAGE EASEMENT PER "FINAL SUBDIVISION & LAND DEVELOPMENT PLAN FOR 1376 CAMPUS ROAD - PHASE 1A" 2024-0333-J TO BE EXTINGUISHED

EXISTING STORM DRAINAGE EASEMENT PER "FINAL SUBDIVISION & LAND DEVELOPMENT PLAN FOR 1376 CAMPUS ROAD - PHASE 1A" 2024-0333-J

EXISTING SEWER EASEMENT PER "FINAL SUBDIVISION & LAND DEVELOPMENT PLAN FOR 1376 CAMPUS ROAD - PHASE 1B"

EXISTING WATER EASEMENT PER "FINAL SUBDIVISION & LAND DEVELOPMENT PLAN FOR 1376 CAMPUS ROAD - PHASE 1B"

EXISTING STORM DRAINAGE EASEMENT PER "FINAL SUBDIVISION & LAND DEVELOPMENT PLAN FOR 1376 CAMPUS ROAD - PHASE 1B"

EXISTING TRAIL EASEMENT PER "FINAL SUBDIVISION & LAND DEVELOPMENT PLAN FOR 1376 CAMPUS ROAD - PHASE 1B"

EXISTING SNOW EASEMENT PER "FINAL LAND DEVELOPMENT PLAN FOR 1376 CAMPUS ROAD - PHASE 1B"

EXISTING STORM DRAINAGE EASEMENT PER "FINAL SUBDIVISION & LAND DEVELOPMENT PLAN FOR 1376 CAMPUS ROAD - PHASE 1A" 2024-0333-J

EXISTING SNOW EASEMENT PER "FINAL SUBDIVISION & LAND DEVELOPMENT PLAN FOR 1376 CAMPUS ROAD - PHASE 1A" 2024-0333-J

L=180.67'
R=175.00'
T=99.32'
Δ=59°09'06"
CB=S11°18'26"W
CD=172.75'

L=171.56'
R=225.00'
T=90.19'
Δ=43°41'10"
CB=S48°09'57"W
CD=167.43'

L=266.75'
R=1525.00'
T=133.71'
Δ=10°01'19"
CB=N64°59'52"E
CD=266.41'

L=134.99'
R=225.00'
T=69.59'
Δ=34°22'26"
CB=N42°48'00"E
CD=132.97'

EXISTING STORM DRAINAGE EASEMENT PER "FINAL SUBDIVISION & LAND DEVELOPMENT PLAN FOR 1376 CAMPUS ROAD - PHASE 1A" 2024-0333-J

EXISTING SNOW EASEMENT PER "FINAL SUBDIVISION & LAND DEVELOPMENT PLAN FOR 1376 CAMPUS ROAD - PHASE 1A" 2024-0333-J

EXISTING STORM DRAINAGE EASEMENT PER "FINAL SUBDIVISION & LAND DEVELOPMENT PLAN FOR 1376 CAMPUS ROAD - PHASE 1A" 2024-0333-J

EXISTING STORM DRAINAGE EASEMENT PER "FINAL SUBDIVISION & LAND DEVELOPMENT PLAN FOR 1376 CAMPUS ROAD - PHASE 1A" 2024-0333-J

EXISTING SNOW EASEMENT PER "FINAL SUBDIVISION & LAND DEVELOPMENT PLAN FOR 1376 CAMPUS ROAD - PHASE 1A" 2024-0333-J

EXISTING STORM DRAINAGE EASEMENT PER "FINAL SUBDIVISION & LAND DEVELOPMENT PLAN FOR 1376 CAMPUS ROAD - PHASE 1A" 2024-0333-J

NOT FOR BUILDING/NOT FOR CONSTRUCTION

NO	BY	DATE	REVISION

SEAL

SEAL

MANAGER: CHRIS VENARCHICK
DESIGN BY: NGG
CHECKED BY: CV
DRAWN BY: NGG
CHECKED BY: CV

CLIENT
1376 CAMPUS ROAD ASSOCIATES, LLC
ONE TOWER BRIDGE
100 FRONT STREET, SUITE 560
WEST CONSHOHOCKEN, PA 19428
(571) 276-3184

SCALE
1" = 50'
0' 50' 100' 150'

PROJECT TITLE
1376 CAMPUS ROAD - PHASE 2
FINAL SUBDIVISION & LAND DEVELOPMENT PLAN
MOUNT JOY TOWNSHIP LANCASTER COUNTY, PA.

SHEET TITLE
SUBDIVISION & EASEMENT PLAN

Land Planning
Landscape Architecture
Civil Engineering
53 West James Street
Suite 101, Lancaster, PA 17603
(717) 715-1396 FAX (717) 435-8277
221 W. Philadelphia Street
Suite 108E, York, PA 17401
(717) 854-3744
320 N. Market Street
Suite 550W, Harrisburg, PA 17101
(717) 599-7615
E-mail: info@rgsassociates.com
www.rgsassociates.com

RGS ASSOCIATES

DATE: OCTOBER 24, 2024
PROJECT NO.: 2024J13-001

SHEET NO.: 9 OF 34

PLOTTED: Thursday, October 24, 2024 @ 09:03AM
SUBDIVISION.SCR
FILENAME: P:\2024\2024J13-001\CADD\FINAL PH2\Plot\Z-Subdivision.dwg
XREFS: Titleblock;Layout;Existing;Layout-HOP;Easements;Existing-GIS;Easements-Ext
IMAGES:

EASEMENT HATCH LEGEND

- PROPOSED STORM DRAINAGE EASEMENT
- PROPOSED TRAIL EASEMENT
- PROPOSED SNOW STOCKPILE EASEMENT
- EXISTING EASEMENT TO BE EXTINGUISHED

SHEET KEY MAP

NORTH

LOT 9
1,082,312 SF
24.85 AC

EXISTING TRAIL EASEMENT PER "FINAL SUBDIVISION & LAND DEVELOPMENT PLAN FOR 1376 CAMPUS ROAD - PHASE 1B"

SOUTH CONIFER DRIVE

EXISTING SNOW EASEMENT PER "FINAL LAND DEVELOPMENT PLAN FOR 1376 CAMPUS ROAD - PHASE 1B"

EXISTING STORM DRAINAGE EASEMENT PER "FINAL SUBDIVISION & LAND DEVELOPMENT PLAN FOR 1376 CAMPUS ROAD - PHASE 1B"

LOT 1
637,512 SF
14.64 AC

EXISTING SEWER EASEMENT PER "FINAL SUBDIVISION & LAND DEVELOPMENT PLAN FOR 1376 CAMPUS ROAD - PHASE 1B"

EXISTING WATER EASEMENT PER "FINAL SUBDIVISION & LAND DEVELOPMENT PLAN FOR 1376 CAMPUS ROAD - PHASE 1B"

EXISTING STORM DRAINAGE EASEMENT PER "FINAL SUBDIVISION & LAND DEVELOPMENT PLAN FOR 1376 CAMPUS ROAD - PHASE 1B"

N/F
CHIOSI, LLC & SCHIAVONI, LTD.
1925 SHEAFFER RD
ACCOUNT: 460717180000O
DEED: 6686431

41.5' R/W

33' R/W

CAMPUS ROAD (T-887)

1" IRON PIPE (FND)

5/8" REBAR (FND)

S14°21'42"E 1123.24'

EXISTING SNOW EASEMENT PER "FINAL LAND DEVELOPMENT PLAN FOR 1376 CAMPUS ROAD - PHASE 1B"

EXISTING SNOW EASEMENT PER "FINAL LAND DEVELOPMENT PLAN FOR 1376 CAMPUS ROAD - PHASE 1B"

EXISTING SEWER EASEMENT PER "FINAL LAND DEVELOPMENT PLAN FOR 1376 CAMPUS ROAD - PHASE 1B"

EXISTING STORM DRAINAGE EASEMENT PER "FINAL LAND DEVELOPMENT PLAN FOR 1376 CAMPUS ROAD - PHASE 1B"

LOT 1
637,512 SF
14.64 AC

ELLA WAY

EXISTING STORM DRAINAGE EASEMENT PER "FINAL SUBDIVISION & LAND DEVELOPMENT PLAN FOR 1376 CAMPUS ROAD - PHASE 1A" 2024-0333-J

LOT 3
229,135 SF
5.26 AC

LOT 5
2,190,862 SF
50.30 AC

L=72.48'
R=125.00'
T=37.29'
Δ=33°13'18"
CB=N29°45'38"W
CD=71.47'

S46°22'18"E 6.00

NOT FOR BUILDING/NOT FOR CONSTRUCTION

PLOTTED: Thursday, October 24, 2024 @ 09:03AM

SUBDIVISION.SCR

FILENAME: P:\2024\2024J13-001\CADD\FINAL PH2\Plot\Z-Subdivision.dwg

XREFS: Titleblock;Layout;Existing;Layout-HOP;Easements;Existing-GIS;Easements-Ext

IMAGES:

NO	BY	DATE	REVISION

SEAL

SEAL

MANAGER: CHRIS VENARCHICK
DESIGN BY: NGG
CHECKED BY: CV
DRAWN BY: NGG
CHECKED BY: CV

SCALE 1" = 50'

CLIENT
1376 CAMPUS ROAD ASSOCIATES, LLC
ONE TOWER BRIDGE
100 FRONT STREET, SUITE 560
WEST CONSHOHOCKEN, PA 19428
(571) 276-3184

PROJECT TITLE
1376 CAMPUS ROAD - PHASE 2
FINAL SUBDIVISION & LAND DEVELOPMENT PLAN
MOUNT JOY TOWNSHIP LANCASTER COUNTY, PA.

SHEET TITLE
SUBDIVISION & EASEMENT PLAN

Land Planning
Landscape Architecture
Civil Engineering
53 West James Street
Suite 101, Lancaster, PA 17603
(717) 715-1396 FAX: (717) 435-8277
221 W. Philadelphia Street
Suite 108E, York, PA 17401
(717) 854-3835
320 N. Market Street
Suite 550W, Harrisburg, PA 17101
(717) 599-7615
E-mail: info@gpgassociates.com
www.gpgassociates.com

GPG ASSOCIATES

DATE: OCTOBER 24, 2024
PROJECT NO.: 2024J13-001

SHEET NO.: 10 OF 34

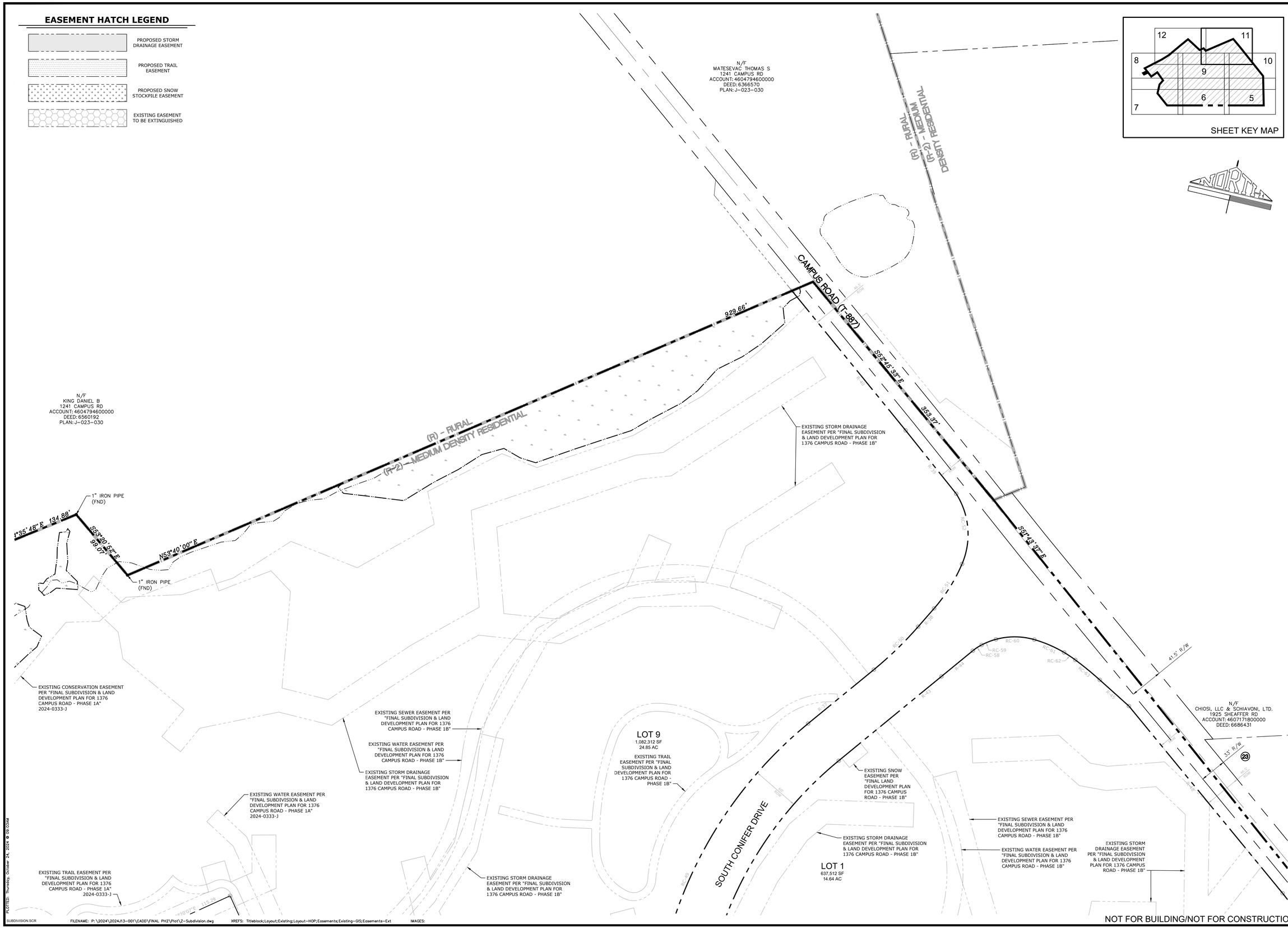

NOT FOR BUILDING/NOT FOR CONSTRUCTION

NO	BY	DATE	REVISION

SEAL

SEAL

MANAGER: CHRIS VENARCHICK
DESIGN BY: NGG
CHECKED BY: CV
DRAWN BY: NGG
CHECKED BY: CV

CLIENT
1376 CAMPUS ROAD ASSOCIATES, LLC
ONE TOWER BRIDGE
100 FRONT STREET, SUITE 560
WEST CONSHOHOCKEN, PA 19428
(571) 276-3184

SCALE
1" = 50'
0' 50' 100' 150'

PROJECT TITLE
1376 CAMPUS ROAD - PHASE 2
FINAL SUBDIVISION & LAND DEVELOPMENT PLAN
MOUNT JOY TOWNSHIP LANCASTER COUNTY, PA.

SHEET TITLE
SUBDIVISION & EASEMENT PLAN

Land Planning
Landscape Architecture
Civil Engineering
53 West James Street
Suite 101, Lancaster, PA 17603
(717) 715-1396 FAX: (717) 435-8277
221 W. Philadelphia Street
Suite 108E, York, PA 17401
(717) 854-3910
320 N. Market Street
Suite 550W, Harrisburg, PA 17101
(717) 599-7615
E-mail: info@rgsassociates.com
www.rgsassociates.com
RGS ASSOCIATES

DATE: OCTOBER 24, 2024
PROJECT NO.: 2024J13-001

SHEET NO.: 11 OF 34

PLOTTED: Thursday, October 24, 2024 @ 09:03AM

SUBDIVISION.SCR FILENAME: P:\2024\2024J13-001\CADD\FINAL PH2\Plot\Z-Subdivision.dwg XREFS: Titleblock;Layout;Existing;Layout-HOP;Easements;Existing-GIS;Easements-Ext IMAGES:

EASEMENT HATCH LEGEND

- PROPOSED STORM DRAINAGE EASEMENT
- PROPOSED TRAIL EASEMENT
- PROPOSED SNOW STOCKPILE EASEMENT
- EXISTING EASEMENT TO BE EXTINGUISHED

SHEET KEY MAP

NORTH

(RR) - RESIDENTIAL
(R) - RURAL

1" IRON PIPE (FND)
1" IRON PIPE (FND)
CONC. MON. (FND)
5/8" REBAR (FND)
N37°27'04"E 74.00'
C3
C1
S52°44'38"E 138.17'
S52°44'38"E 138.07'
CONC. MON. (FND)
1/2" REBAR (FND)
N37°45'22"W 295.53'
S60°10'49"E
EXISTING WATER EASEMENT PER "FINAL SUBDIVISION & LAND DEVELOPMENT PLAN FOR 1376 CAMPUS ROAD - PHASE 1A" 2024-0333-J
N/F
KING DANIEL B
1241 CAMPUS RD
ACCOUNT: 46047946000000
DEED: 6560192
PLAN: J-023-030
SARAH DRIVE
50' R/W
RIGHT-OF-WAY LINE
GROFF AVENUE
CONC. MON. (FND)
EXISTING SNOW EASEMENT PER "FINAL SUBDIVISION & LAND DEVELOPMENT PLAN FOR 1376 CAMPUS ROAD - PHASE 1A" 2024-0333-J
EXISTING STORM DRAINAGE EASEMENT PER "FINAL SUBDIVISION & LAND DEVELOPMENT PLAN FOR 1376 CAMPUS ROAD - PHASE 1A" 2024-0333-J
R-21
RC-24
RC-23
R-19
RC-22
RC-21
RIGHT-OF-WAY LINE
CONC. MON. (FND)
1/2" REBAR (FND)
1/2" REBAR (FND)
N37°01'44"E 479.74'
S37°45'07"W 511.13'
EXISTING STORM DRAINAGE EASEMENT PER "FINAL SUBDIVISION & LAND DEVELOPMENT PLAN FOR 1376 CAMPUS ROAD - PHASE 1A" 2024-0333-J

ROW CURVE DATA - PHASE 1A						
CURVE	RADIUS	LENGTH	TANGENT	DELTA	BEARING	DISTANCE
RC-1	24.00	37.79'	24.10'	90°13'36"	S88°44'31"W	34.01'
RC-2	14.00	21.99'	14.00'	90°00'00"	S1°22'18"E	19.80'
RC-3	14.00	21.99'	14.00'	90°00'00"	S88°37'42"W	19.80'
RC-4	2525.00	452.09'	226.65'	10°15'31"	N48°45'28"E	451.49'
RC-5	24.00	34.59'	21.07'	82°34'18"	S12°36'04"W	31.67'
RC-6	355.00	18.29'	9.15'	2°57'08"	N27°12'30"W	18.29'
RC-7	295.00	171.77'	88.40'	33°21'46"	N42°24'49"W	169.36'
RC-8	1530.00	99.28'	49.66'	3°43'04"	S57°14'10"E	99.26'
RC-9	24.00	36.94'	23.25'	88°11'35"	S80°31'35"W	33.40'
RC-10	325.00	237.42'	124.29'	41°51'24"	N57°21'29"E	232.18'
RC-11	1475.00	488.15'	246.33'	18°57'43"	S68°48'19"W	485.93'
RC-12	400.00	397.92'	217.17'	56°59'54"	N87°49'25"E	381.72'
RC-13	125.00	167.10'	98.71'	76°35'36"	S78°01'34"W	154.93'
RC-14	175.00	64.68'	32.72'	21°10'40"	N50°19'06"E	64.32'
RC-15	14.00	19.70'	11.87'	80°36'31"	S20°36'11"W	18.11'
RC-16	225.00	5.63'	2.81'	1°25'57"	N18°59'06"W	5.63'
RC-17	175.00	261.73'	162.31'	85°41'28"	N1°57'45"W	238.01'
RC-18	475.00	353.43'	185.34'	42°37'53"	S23°29'33"E	345.33'
RC-19	14.00	20.87'	12.92'	85°25'32"	N44°53'22"W	18.99'
RC-20	14.00	20.87'	12.92'	85°25'32"	N49°41'06"E	18.99'
RC-21	475.00	255.21'	130.77'	30°47'02"	S22°21'51"W	252.15'
RC-22	125.00	196.35'	125.00'	90°00'00"	N7°14'38"W	176.78'
RC-23	14.00	21.99'	14.00'	90°00'00"	S82°45'22"W	19.80'
RC-24	14.00	21.99'	14.00'	90°00'00"	N7°14'38"W	19.80'
RC-25	175.00	274.89'	175.00'	90°00'00"	N7°14'38"W	247.49'
RC-26	425.00	612.43'	373.14'	82°33'51"	S3°31'33"E	560.80'
RC-27	225.00	24.83'	12.43'	6°19'26"	N41°38'46"W	24.82'
RC-28	14.00	19.70'	11.87'	80°36'31"	S78°47'18"E	18.11'
RC-29	125.00	46.20'	23.37'	21°10'40"	N50°19'06"E	45.94'
RC-30	175.00	233.94'	138.19'	76°35'36"	S78°01'34"W	216.91'
RC-31	14.00	21.99'	14.00'	90°00'00"	N71°19'22"E	19.80'
RC-32	14.00	23.62'	15.73'	96°39'56"	S22°00'36"E	20.92'
RC-33	350.00	307.47'	164.45'	50°19'58"	N84°29'27"E	297.67'
RC-34	1525.00	504.70'	254.68'	18°57'43"	S68°48'19"W	502.40'
RC-35	275.00	200.90'	105.17'	41°51'24"	N57°21'29"E	196.46'
RC-36	24.00	36.94'	23.25'	88°11'35"	N7°40'00"W	33.40'
RC-37	1530.00	41.38'	20.69'	1°32'58"	S50°59'19"E	41.37'
RC-38	530.00	151.60'	76.32'	16°23'21"	S42°01'09"E	151.09'
RC-39	24.00	34.86'	21.32'	83°13'19"	N75°26'08"W	31.88'
RC-40	400.00	261.76'	135.76'	37°29'41"	N81°42'03"E	257.12'
RC-41	14.00	19.62'	11.81'	80°17'18"	S60°18'15"W	18.05'
RC-42	225.00	21.41'	10.72'	5°27'11"	N22°53'11"E	21.41'
RC-43	175.00	10.29'	5.15'	3°22'14"	N23°55'40"E	10.29'
RC-44	14.00	22.22'	14.23'	90°56'17"	N23°13'36"W	19.96'
RC-45	400.00	200.18'	102.23'	28°40'24"	S54°21'32"E	198.10'
RC-46	14.00	21.42'	13.44'	87°38'33"	N83°50'37"W	19.39'
RC-47	350.00	481.79'	287.85'	78°52'13"	S77°06'00"E	444.64'
RC-48	24.00	36.50'	22.83'	87°08'06"	N19°53'51"E	33.08'
RC-49	530.00	565.70'	313.16'	61°09'18"	S6°54'27"W	539.23'
RC-50	464.00	77.03'	38.61'	9°30'44"	N32°43'44"E	76.94'
RC-51	209.00	65.70'	33.12'	18°00'43"	N18°58'00"E	65.43'
RC-52	94.00	91.43'	49.70'	55°43'56"	N17°54'19"W	87.87'
RC-53	2475.00	443.14'	222.16'	10°15'31"	N48°45'28"E	442.55'
RC-54	24.00	34.59'	21.07'	82°34'18"	S84°49'38"E	31.67'
RC-55	355.00	96.37'	48.48'	15°33'13"	N51°19'05"W	96.07'
RC-56	1470.00	227.86'	114.16'	8°52'52"	S54°39'16"E	227.63'
RC-57	470.00	719.40'	451.49'	87°41'55"	S6°21'52"E	651.20'
RC-58	64.00	13.22'	6.63'	11°50'13"	S43°24'12"W	13.20'
RC-59	89.00	19.21'	9.64'	12°21'58"	S55°30'18"W	19.17'
RC-60	89.00	48.46'	24.85'	31°11'52"	S77°17'13"W	47.86'
RC-61	159.00	40.51'	20.37'	14°35'56"	N79°48'54"W	40.40'
RC-62	159.00	16.83'	8.42'	6°03'47"	N69°29'02"W	16.82'
RC-63	433.99	39.40'	19.75'	5°12'43"	N63°51'06"W	39.38'
RC-64	24.00	38.15'	24.45'	91°04'25"	N1°54'30"W	34.26'

PROPOSED ROW LINE DATA - PHASE 1A		
LINE	BEARING	LENGTH
R-1	N44°42'09"W	36.88
R-2	N46°08'41"W	16.07
R-3	S43°37'42"W	105.77
R-4	S46°22'18"E	5.00
R-5	S43°37'42"W	50.00
R-6	N46°22'18"W	11.00
R-7	N43°37'42"E	112.03
R-8	N53°53'13"E	5.81
R-9	N64°16'04"E	60.00
R-10	S36°25'48"W	48.01
R-11	N63°40'38"W	262.07
R-12	N60°54'26"E	12.05
R-13	N71°43'53"E	50.00
R-14	N87°36'08"W	10.00
R-15	S02°23'45"W	50.00
R-16	S87°36'08"E	10.00
R-17	N37°45'22"E	196.99
R-18	S52°14'38"E	108.53
R-19	S37°45'22"W	521.13
R-20	S52°14'38"E	50.00
R-21	S37°45'22"W	10.00
R-22	S52°14'38"E	113.45
R-23	S52°14'38"E	299.98
R-24	S37°45'22"W	196.99
R-25	S60°54'26"W	12.05
R-26	S63°40'38"E	223.07
R-27	N26°19'22"E	6.15
R-28	S63°40'38"E	50.00
R-29	S26°19'22"W	3.88
R-30	S36°25'48"W	48.01
R-31	N64°23'13"W	50.00
R-32	S52°20'07"W	7.85
R-33	N37°39'53"W	50.00
R-34	S52°20'07"W	15.50
R-35	S52°20'07"W	56.00
R-36	N37°39'53"W	46.97
R-37	S37°29'06"W	106.01
R-38	N27°58'22"E	30.30
R-39	S51°43'17"E	101.01
R-40	N52°17'26"W	224.56
R-41	N43°37'42"E	295.06
R-42	N53°53'13"E	5.81
R-43	S37°29'06"W	165.76
R-44	S37°29'06"W	50.58
R-45	N61°15'04"W	48.74
R-46	S52°31'26"E	302.02
R-47	S51°23'26"E	246.01
R-48	S51°08'53"E	161.14
R-49	S47°26'43"E	13.68

ROW CURVE DATA - PHASE 2						
CURVE	RADIUS	LENGTH	TANGENT	DELTA	BEARING	DISTANCE
RC-65	475.00	162.55'	82.08'	19°36'27"	N62°08'20"E	161.76'
RC-66	225.00	490.48'	431.31'	124°54'03"	S9°29'32"W	398.97'
RC-67	14.00	19.37'	11.60'	79°16'51"	N13°19'04"W	17.86'
RC-68	525.00	179.66'	90.72'	19°36'27"	N62°08'20"E	178.79'
RC-69	175.00	372.86'	316.21'	122°04'38"	S10°54'14"W	306.23'
RC-70	14.00	22.27'	14.28'	91°08'03"	N84°17'54"E	19.99'
RC-71	275.00	150.12'	76.98'	31°16'39"	S54°22'12"W	148.26'
RC-72	1475.00	258.00'	129.33'	10°01'19"	N64°59'52"E	257.67'
RC-73	175.00	104.99'	54.13'	34°22'26"	N42°48'00"E	103.42'

PROPOSED ROW LINE DATA - PHASE 2		
LINE	BEARING	LENGTH
R-50	N52°20'07"E	48.05
R-51	N26°19'22"E	71.31
R-52	N52°20'07"E	48.05

STORM DRAINAGE EASEMENT LINE DATA		
LINE	BEARING	LENGTH
SDE-400	N63°40'38"W	223.07
SDE-401	N11°17'46"E	69.56
SDE-402	N44°08'56"E	37.92
SDE-403	S74°08'15"E	55.32
SDE-404	N06°24'39"E	32.30
SDE-405	N09°25'54"W	29.76
SDE-406	N06°31'51"W	74.22
SDE-407	N09°11'13"E	99.66
SDE-408	N25°57'33"E	87.90
SDE-409	N36°33'51"E	62.59
SDE-410	S43°22'36"E	30.00
SDE-411	S36°00'49"W	54.92
SDE-412	S25°57'33"W	80.33
SDE-413	S09°11'13"W	91.10
SDE-414	S06°29'17"E	68.32
SDE-415	S09°25'54"E	34.18
SDE-416	S06°24'39"W	36.84
SDE-417	N88°49'37"E	38.37
SDE-418	S37°55'30"E	83.92
SDE-419	S61°01'59"E	52.41
SDE-420	N63°48'34"E	47.42
SDE-421	N19°54'13"W	37.90
SDE-422	S26°19'22"W	128.00
SDE-423	N26°19'22"E	3.88
SDE-424	N26°19'22"E	5.16
SDE-425	N72°43'55"E	24.69
SDE-426	N35°55'41"E	89.07
SDE-427	N69°20'32"E	60.24
SDE-428	S71°23'41"E	61.42
SDE-429	N60°12'47"E	142.62
SDE-430	N64°31'20"E	124.55
SDE-431	N68°58'12"E	128.55
SDE-432	N73°07'22"E	119.49
SDE-433	N76°46'04"E	103.96
SDE-434	N62°37'08"E	45.20
SDE-435	N40°51'55"E	88.65
SDE-436	S49°08'05"E	30.00
SDE-437	S40°51'55"W	94.41
SDE-438	S62°37'08"W	54.68
SDE-439	S76°46'04"W	106.73
SDE-440	S73°07'22"W	117.45
SDE-441	S68°58'12"W	126.30
SDE-442	S64°31'20"W	122.26
SDE-443	S60°12'47"W	143.88
SDE-444	S29°30'55"E	41.55
SDE-445	S19°45'34"E	47.83
SDE-446	N37°26'36"E	86.15
SDE-447	N15°53'03"E	88.52
SDE-448	N44°56'38"E	55.25
SDE-449	N66°18'43"E	161.97
SDE-450	N60°58'33"E	63.79
SDE-451	S28°25'54"E	30.00
SDE-452	S60°58'28"W	64.88
SDE-453	S66°18'43"W	157.71
SDE-454	S44°56'38"W	41.82
SDE-455	S15°53'03"W	86.45
SDE-456	S35°38'00"W	79.91

EXTINGUISHED EXISTING EASEMENT LINE DATA		
LINE	BEARING	LENGTH
EE-1	N63°40'38"W	30.00'
EE-2	N26°19'22"E	44.59'
EE-3	N63°40'38"W	4.87'
EE-4	S57°31'10"W	54.12'
EE-5	N77°27'48"W	22.84'
EE-6	S21°11'20"W	13.05'
EE-7	N63°40'38"W	30.12'
EE-8	N21°11'20"E	4.15'
EE-9	N49°43'35"W	166.98'
EE-10	N40°16'25"E	30.00'
EE-11	S49°43'35"E	156.09'
EE-12	S77°27'48"E	36.68'
EE-13	N57°31'10"E	30.78'
EE-14	N17°31'45"E	108.55'
EE-15	N26°36'51"E	46.99'
EE-16	S63°23'09"E	30.00'
EE-17	S26°36'51"W	44.60'
EE-18	S17°31'45"W	22.50'
EE-19	S63°40'38"E	19.33'
EE-20	N41°24'05"E	106.47'
EE-21	S66°56'11"E	31.60'
EE-22	S41°24'05"W	98.35'
EE-23	S31°14'27"E	24.97'
EE-24	S58°45'33"W	30.00'
EE-25	N31°14'27"W	18.31'
EE-26	S50°37'04"E	17.51'
EE-27	S39°22'56"W	30.00'
EE-28	N50°37'04"W	17.51'
EE-29	S26°19'22"W	6.21'
EE-30	S63°40'38"E	17.97'
EE-31	S26°19'22"W	30.00'
EE-32	N63°40'38"W	17.97'
EE-33	S26°19'22"W	18.13'
EE-34	S64°02'51"E	17.88'
EE-35	S25°57'09"W	30.00'
EE-36	N64°02'51"W	18.07'
EE-37	S26°19'22"W	53.72'
EE-38	S42°18'56"W	114.88'
EE-39	S76°32'20"W	211.55'
EE-40	S65°35'54"W	287.81'
EE-41	S60°05'38"W	101.28'
EE-42	S52°20'06"W	48.95'
EE-43	S29°30'55"E	42.06'
EE-44	S19°45'34"E	47.83'
EE-45	N26°19'22"E	9.04'
EE-46	N72°43'55"E	24.69'
EE-47	N35°55'41"E	89.07'
EE-48	N69°20'32"E	60.24'
EE-49	S71°23'41"E	60.08'
EE-50	N52°20'06"E	45.32'
EE-51	N60°05'38"E	104.76'
EE-52	N65°35'54"E	292.12'
EE-53	N76°32'20"E	205.19'
EE-54	N42°18'56"E	105.65'
EE-55	S47°41'04"E	30.00'

STORM DRAINAGE EASEMENT CURVE DATA						
CURVE	RADIUS	LENGTH	TANGENT	DELTA	BEARING	DISTANCE
SDEC-400	175.00	38.42'	19.29'	12°34'39"	N69°57'58"W	38.34'
SDEC-401	225.66	17.38'	8.69'	4°24'45"	S48°52'01"E	17.37'
SDEC-402	224.25	7.38'	3.69'	1°53'09"	S52°01'01"E	7.38'
SDEC-403	14.00	19.37'	11.60'	79°16'51"	S13°19'04"E	17.86'
SDEC-404	14.00	21.99'	14.00'	90°00'00"	S71°19'22"W	19.80'
SDEC-405	350.00	240.78'	125.38'	39°25'00"	S89°56'56"W	236.06'
SDEC-406	14.00	23.62'	15.73'	96°39'56"	N22°00'36"W	20.92'
SDEC-407	175.00	18.02'	9.02'	5°54'03"	N47°11'03"W	18.01'
SDEC-408	13.99	22.27'	14.29'	91°14'04"	S84°17'54"W	19.99'

EXTINGUISHED EXISTING EASEMENT CURVE DATA						
CURVE	RADIUS	LENGTH	TANGENT	DELTA	BEARING	DISTANCE
EEC-1	275.00'	209.68'	110.23'	43°41'10"	N48°09'57"E	204.64'
EEC-2	1475.00'	250.56'	125.58'	9°43'58"	N65°08'33"E	250.26'
EEC-3	1505.00'	252.64'	126.62'	9°37'05"	S65°12'00"W	252.34'
EEC-4	245.00'	115.95'	59.08'	27°06'59"	S56°27'02"W	114.87'
EEC-5	245.00'	40.83'	20.46'	9°32'58"	S31°05'51"W	40.79'
EEC-6	350.00'	240.78'	125.38'	39°25'00"	S89°56'56"W	236.06'
EEC-7	14.00'	23.62'	15.73'	96°39'56"	N22°00'36"W	20.92'

NO	BY	DATE	REVISION

SEAL

SEAL

MANAGER: CHRIS VENARCHICK

DESIGN BY: NGG | CHECKED BY: CV

DRAWN BY: NGG | CHECKED BY: CV

CLIENT
1376 CAMPUS ROAD ASSOCIATES, LLC
ONE TOWER BRIDGE
100 FRONT STREET, SUITE 560
WEST CONSHOHOCKEN, PA 19428
(571) 276-3184

SCALE: N.T.S.

PROJECT TITLE
1376 CAMPUS ROAD - PHASE 2
FINAL SUBDIVISION & LAND DEVELOPMENT PLAN
MOUNT JOY TOWNSHIP | LANCASTER COUNTY, PA.

SHEET TITLE
SUBDIVISION & EASEMENT DATA

Land Planning
Landscape Architecture
Civil Engineering
53 West James Street
Suite 101, Lancaster, PA 17603
(717) 715-1396 FAX (717) 435-8277
221 W. Philadelphia Street
Suite 108E, York, PA 17401
(717) 854-3703
320 N. Market Street
Suite 550W, Harrisburg, PA 17101
(717) 599-7615
E-mail: info@cgaassociates.com
www.cgaassociates.com

CGA ASSOCIATES

DATE: OCTOBER 24, 2024
PROJECT NO.: 2024J13-001

SHEET NO.: 13 OF 34

NOT FOR BUILDING/NOT FOR CONSTRUCTION

PLOTTED: Thursday, October 24, 2024 @ 09:03AM
SUBDIVISION.SCR
FILENAME: P:\2024\2024J13-001\CADD\FINAL PH2\Plot\Z-Subdivision.dwg
XREFS: Titleblock;Layout;Existing;Layout-HOP;Easements;Existing-GIS;Easements-Ext
IMAGES:

NORTH

LOT 10
LOT 9
LOT 8
LOT 7
LOT 6
LOT 5
LOT 13
LOT 9 ACCESS DRIVE
TAVIN WAY
NATALIE DRIVE
BRIELLE DRIVE
GIANNA DRIVE
BMP-005
BMP-008
BMP-009
BMP-010
BMP-013
BMP-014
CONNECTION TO BITUMINOUS PATHWAY
MINIMUM BUILDING SETBACK LINE
PROPOSED ASPHALT DRIVEWAY (TYP.)
PROPOSED CURB TRANSITION (TYP.)
PROPOSED SLANT CURB (TYP.)
PROPOSED VERTICAL CURB (TYP.)
PROPOSED CONCRETE SIDEWALK (TYP.)
UNIT 89
UNIT 88
UNIT 90
UNIT 91
UNIT 92
UNIT 93
UNIT 94
UNIT 95
UNIT 96
UNIT 97
UNIT 98
UNIT 99
UNIT 100
UNIT 101
UNIT 102
UNIT 103
UNIT 104
UNIT 105
UNIT 106
UNIT 107
UNIT 108
UNIT 109
UNIT 110
UNIT 111
UNIT 112
UNIT 113
UNIT 114
UNIT 115
UNIT 116
UNIT 77
UNIT 78
UNIT 79
UNIT 80
UNIT 81
UNIT 82
UNIT 83
UNIT 84
UNIT 85
UNIT 60
UNIT 61
UNIT 62
UNIT 63
UNIT 64
UNIT 73
UNIT 127
UNIT 128
UNIT 129
UNIT 130
UNIT 131

NOT FOR BUILDING/NOT FOR CONSTRUCTION

NO	BY	DATE	REVISION

SEAL

SEAL

MANAGER: CHRIS VENARCHICK

DESIGN BY:	CHECKED BY:
NGG	CV
DRAWN BY:	CHECKED BY:
NGG	CV

SCALE: 1" = 40'

0' 40' 80' 120'

CLIENT
1376 CAMPUS ROAD ASSOCIATES, LLC
ONE TOWER BRIDGE
100 FRONT STREET, SUITE 560
WEST CONSHOHOCKEN, PA 19428
(571) 276-3184

PROJECT TITLE
1376 CAMPUS ROAD - PHASE 2
FINAL SUBDIVISION & LAND DEVELOPMENT PLAN
MOUNT JOY TOWNSHIP LANCASTER COUNTY, PA.

SHEET TITLE
LAYOUT PLAN

Land Planning
Landscape Architecture
Civil Engineering
53 West James Street
Suite 101, Lancaster, PA 17603
(717) 715-1396 FAX (717) 435-8277
221 W. Philadelphia Street
Suite 108E, York, PA 17401
(717) 854-3765
320 N. Market Street
Suite 550W, Harrisburg, PA 17101
(717) 599-7615
E-mail: info@rgsassociates.com
www.rgsassociates.com

RGS ASSOCIATES

DATE: OCTOBER 24, 2024
PROJECT NO.: 2024J13-001

SHEET NO.: 14 OF 34

PLOTTED: Thursday, October 24, 2024 @ 09:04AM
LAYOUT.SCR
FILENAME: P:\2024\2024J13-001\CADD\FINAL PH2\Plot\Z-Layout.dwg
XREFS: Titleblock;Layout;Existing;Layout-HOP;Easements
IMAGES:

DRIVEWAY CLEAR SIGHT TRIANGLE AND SAFE SIGHT STOPPING DISTANCE						
UNIT	STREET	INTERSECTING STREET	DIRECTION	GRADE (%)	SIGHT DISTANCES (FEET)	
					REQUIRED:	ACTUAL:
90	BRIELLE DRIVE	UNIT 90 DRIVEWAY AND STREET BRIELLE DRIVE	TO THE LEFT	-1.75	150	>150
			TO THE RIGHT	+1.75	145	>145
91	BRIELLE DRIVE	UNIT 91 DRIVEWAY AND STREET BRIELLE DRIVE	TO THE LEFT	-1.75	150	>150
			TO THE RIGHT	+1.75	N/A	N/A
92	BRIELLE DRIVE	UNIT 92 DRIVEWAY AND STREET BRIELLE DRIVE	TO THE LEFT	-1.75	150	>150
			TO THE RIGHT	+1.75	145	>145
93	BRIELLE DRIVE	UNIT 93 DRIVEWAY AND STREET BRIELLE DRIVE	TO THE LEFT	-1.75	150	>150
			TO THE RIGHT	+1.75	145	>145
94	BRIELLE DRIVE	UNIT 94 DRIVEWAY AND STREET BRIELLE DRIVE	TO THE LEFT	-1.75	150	>150
			TO THE RIGHT	+1.75	145	>145
95	BRIELLE DRIVE	UNIT 95 DRIVEWAY AND STREET BRIELLE DRIVE	TO THE LEFT	+6.50	139	>139
			TO THE RIGHT	+1.75	145	>145
96	BRIELLE DRIVE	UNIT 96 DRIVEWAY AND STREET BRIELLE DRIVE	TO THE LEFT	+6.50	139	>139
			TO THE RIGHT	-6.50	159	>159
97	BRIELLE DRIVE	UNIT 97 DRIVEWAY AND STREET BRIELLE DRIVE	TO THE LEFT	+1.75	N/A	N/A
			TO THE RIGHT	-1.75	150	>150
98	BRIELLE DRIVE	UNIT 98 DRIVEWAY AND STREET BRIELLE DRIVE	TO THE LEFT	+1.75	145	>145
			TO THE RIGHT	-1.75	150	>150
99	BRIELLE DRIVE	UNIT 99 DRIVEWAY AND STREET BRIELLE DRIVE	TO THE LEFT	+1.75	145	>145
			TO THE RIGHT	-1.75	150	>150
100	BRIELLE DRIVE	UNIT 100 DRIVEWAY AND STREET BRIELLE DRIVE	TO THE LEFT	+1.75	145	>145
			TO THE RIGHT	-1.75	150	>150
101	BRIELLE DRIVE	UNIT 101 DRIVEWAY AND STREET BRIELLE DRIVE	TO THE LEFT	+1.75	145	>145
			TO THE RIGHT	+6.50	139	>139
102	TAVIN WAY	UNIT 102 DRIVEWAY AND STREET TAVIN WAY	TO THE LEFT	-1.50	150	>150
			TO THE RIGHT	+1.50	145	>145
103	TAVIN WAY	UNIT 103 DRIVEWAY AND STREET TAVIN WAY	TO THE LEFT	-1.50	150	>150
			TO THE RIGHT	+1.50	145	>145
104	TAVIN WAY	UNIT 104 DRIVEWAY AND STREET TAVIN WAY	TO THE LEFT	-1.50	150	>150
			TO THE RIGHT	+1.50	145	>145
105	TAVIN WAY	UNIT 105 DRIVEWAY AND STREET TAVIN WAY	TO THE LEFT	-1.50	150	>150
			TO THE RIGHT	+1.50	145	>145
106	TAVIN WAY	UNIT 106 DRIVEWAY AND STREET TAVIN WAY	TO THE LEFT	-1.50	150	>150
			TO THE RIGHT	+1.50	145	>145
107	TAVIN WAY	UNIT 107 DRIVEWAY AND STREET TAVIN WAY	TO THE LEFT	-1.50	150	>150
			TO THE RIGHT	+1.50	145	>145
108	TAVIN WAY	UNIT 108 DRIVEWAY AND STREET TAVIN WAY	TO THE LEFT	+1.50	145	>145
			TO THE RIGHT	-1.50	150	>150
109	TAVIN WAY	UNIT 109 DRIVEWAY AND STREET TAVIN WAY	TO THE LEFT	+1.50	145	>145
			TO THE RIGHT	-1.50	150	>150
110	TAVIN WAY	UNIT 110 DRIVEWAY AND STREET TAVIN WAY	TO THE LEFT	+1.50	145	>145
			TO THE RIGHT	-1.50	150	>150
111	TAVIN WAY	UNIT 111 DRIVEWAY AND STREET TAVIN WAY	TO THE LEFT	+1.50	145	>145
			TO THE RIGHT	-1.50	150	>150
112	TAVIN WAY	UNIT 112 DRIVEWAY AND STREET TAVIN WAY	TO THE LEFT	+1.50	145	>145
			TO THE RIGHT	-1.50	150	>150
113	TAVIN WAY	UNIT 113 DRIVEWAY AND STREET TAVIN WAY	TO THE LEFT	+1.50	145	>145
			TO THE RIGHT	-1.50	150	>150
114	TAVIN WAY	UNIT 114 DRIVEWAY AND STREET TAVIN WAY	TO THE LEFT	+1.50	145	>145
			TO THE RIGHT	-1.50	150	>150
115	TAVIN WAY	UNIT 115 DRIVEWAY AND STREET TAVIN WAY	TO THE LEFT	+1.50	145	>145
			TO THE RIGHT	+7.00	138	>138
116	TAVIN WAY	UNIT 116 DRIVEWAY AND STREET TAVIN WAY	TO THE LEFT	-7.00	159	>159
			TO THE RIGHT	+7.00	138	>138

CLEAR SIGHT TRIANGLE AND SAFE SIGHT STOPPING DISTANCE (CST)					
LOCATION	INTERSECTION	DIRECTION	GRADE (%)	SIGHT DISTANCES (FEET)	
CST- #				REQUIRED:	ACTUAL:
5	BRIELLE DRIVE & GIANNA DRIVE	TO THE LEFT	+3.00%	143'	>143'
		TO THE RIGHT	-3.00%	151'	>151'
6	TAVIN WAY & BRIELLE DRIVE	TO THE LEFT	-6.50%	159'	>159'
		TO THE RIGHT	+6.50%	138'	>138'
7	TAVIN WAY & NATALIE DRIVE & CLUB HOUSE ACCESS DRIVE	TO THE LEFT	-2.25%	77'	>77'
		TO THE RIGHT	+2.25%	143'	>143'
8	NATALIE DRIVE & TAVIN WAY & LOT 9 ACCESS DRIVE	TO THE LEFT	-1.50%	111'	>111'
		TO THE RIGHT	-4.00%	78'	>78'
9	BRIELLE DRIVE & NATALIE DRIVE	TO THE LEFT	-2.25%	151'	>151'
		TO THE RIGHT	+2.25%	143'	>143'
23	CLUB HOUSE ACCES DRIVE & TAVIN WAY & LOT 9 ACCESS DRIVE	TO THE LEFT	-4.00%	78'	>78'
		TO THE RIGHT	-1.50%	111'	>111'

CENTERLINE CURVE DATA							
SEGMENT	RADIUS	LENGTH	TANGENT	CHORD DIRECTION	CHORD LENGTH	DELTA - Δ	STREET NAME
CLC-17	250.00'	190.62'	100.21'	N48°09'57"E	186.03'	43°41'10"	BRIELLE DRIVE
CLC-18	1500.00'	262.37'	131.52'	N64°59'52"E	262.04'	10°01'19"	BRIELLE DRIVE
CLC-19	200.00'	154.40'	81.28'	N37°52'17"E	150.59'	44°13'53"	BRIELLE DRIVE
CLC-20	200.00'	458.64'	442.87'	N6°14'48"E	364.55'	131°23'31"	TAVIN WAY
CLC-21	500.00'	171.11'	86.40'	N62°08'20"E	170.27'	19°36'27"	TAVIN WAY

CENTERLINE LINE DATA			
SEGMENT	LENGTH	DIRECTION	STREET NAME
CL-10	183.20'	N26°19'22"E	BRIELLE DRIVE
CL-11	18.87'	N15°45'20"E	BRIELLE DRIVE
CL-12	10.00'	N59°26'58"W	TAVIN WAY
CL-13	94.54'	N52°20'07"E	TAVIN WAY

NO	BY	DATE	REVISION

SEAL

SEAL

MANAGER: CHRIS VENARCHICK

DESIGN BY: NGG | CHECKED BY: CV

DRAWN BY: NGG | CHECKED BY: CV

CLIENT
1376 CAMPUS ROAD ASSOCIATES, LLC
ONE TOWER BRIDGE
100 FRONT STREET, SUITE 560
WEST CONSHOHOCKEN, PA 19428
(571) 276-3184

SCALE
N.T.S.

PROJECT TITLE
1376 CAMPUS ROAD - PHASE 2
FINAL SUBDIVISION & LAND DEVELOPMENT PLAN
MOUNT JOY TOWNSHIP LANCASTER COUNTY, PA.

SHEET TITLE
CENTERLINE & SIGHT DISTANCE DATA

Land Planning
Landscape Architecture
Civil Engineering
53 West James Street
Suite 101, Lancaster, PA 17603
(717) 715-1396 FAX (717) 435-8277
221 W. Philadelphia Street
Suite 108E, York, PA 17401
(717) 854-3615
320 N. Market Street
Suite 550W, Harrisburg, PA 17101
(717) 599-7615
E-mail info@rgsassociates.com
www.rgsassociates.com

RGS ASSOCIATES

DATE: OCTOBER 24, 2024

PROJECT NO.: 2024J13-001

SHEET NO.: 15 OF 34

NOT FOR BUILDING/NOT FOR CONSTRUCTION

PLOTTED: Thursday, October 24, 2024 @ 09:04AM

LAYOUT.SCR FILENAME: P:\2024\2024J13-001\CADD\FINAL PH2\Plot\Z-Layout.dwg XREFS: Titleblock;Layout;Existing;Layout-HOP;Easements IMAGES:

NORTH

SEE PLANS PREPARED BY TRAFFIC PLANNING AND DESIGN, INC FOR THE LAYOUT, GRADING AND STORMWATER DESIGN ASSOCIATED WITH THE CAMPUS ROAD ROUNDABOUT

HAMPDEN ROAD
GROFF AVENUE
CAMPUS ROAD (T-887)
UNT TO CONOY CREEK
PROPOSED 100-YEAR FLOODPLAIN
SARAH DRIVE
BMP-015
BMP-007
BMP-014
BMP-008
BMP-013
BMP-009
BMP-010
BMP-011
BMP-012
BMP-001
BMP-002
BMP-003
BMP-004
BMP-005
BMP-006
LOT 1
LOT 3
LOT 5
LOT 6
LOT 7
LOT 8
LOT 9
LOT 10
LOT 11
LOT 12
LOT 13
PHASE 1A
PHASE 1B
PHASE 2
PHASE 3
PHASE 4
TAWNY WAY
NATALIE DRIVE
BRIARLIFE DRIVE
GIANNA DRIVE
CONIFER DRIVE
ELLA WAY
WOODLAND AVENUE
RIDGEVIEW AVENUE
BRIARCLIFF ROAD
GREENLEAF LANE
SHEAFFER ROAD (T-888)
UNT TO CONOY CREEK
PROPOSED 100-YEAR FLOODPLAIN

NOT FOR BUILDING/NOT FOR CONSTRUCTION

NO	BY	DATE	REVISION

SEAL

SEAL

MANAGER: CHRIS VENARCHICK
DESIGN BY: NGG | CHECKED BY: CV
DRAWN BY: NGG | CHECKED BY: CV

SCALE
1" = 150'
0' 150' 300' 450'

CLIENT
1376 CAMPUS ROAD ASSOCIATES, LLC
ONE TOWER BRIDGE
100 FRONT STREET, SUITE 560
WEST CONSHOHOCKEN, PA 19428
(571) 276-3184

PROJECT TITLE
1376 CAMPUS ROAD - PHASE 2
FINAL SUBDIVISION & LAND DEVELOPMENT PLAN
MOUNT JOY TOWNSHIP LANCASTER COUNTY, PA.

SHEET TITLE
OVERALL GRADING PLAN

Land Planning
Landscape Architecture
Civil Engineering
53 West James Street, Suite 101, Lancaster, PA 17603, (717) 715-1396 Fax: (717) 435-8366
221 W. Philadelphia Street, Suite 108E, York, PA 17401, (717) 854-3901
320 N. Market Street, Suite 550W, Harrisburg, PA 17101, (717) 599-7615
E-mail: info@rgsassociates.com
www.rgsassociates.com
RGS ASSOCIATES

DATE: OCTOBER 24, 2024
PROJECT NO.: 2024J13-001

SHEET NO.: 16 OF 34

PLOTTED: Thursday, October 24, 2024 @ 09:04AM
OVERALL-GRADING.SCR
FILENAME: P:\2024\2024J13-001\CADD\FINAL PH2\Plot\Z-Overall-Grading.dwg
XREFS: Layout;Profiles-Utilities;Existing;Titleblock;Existing-GIS;EG;Layout-HOP;Floodplain;ES-LOD-NPDES;PG
IMAGES:

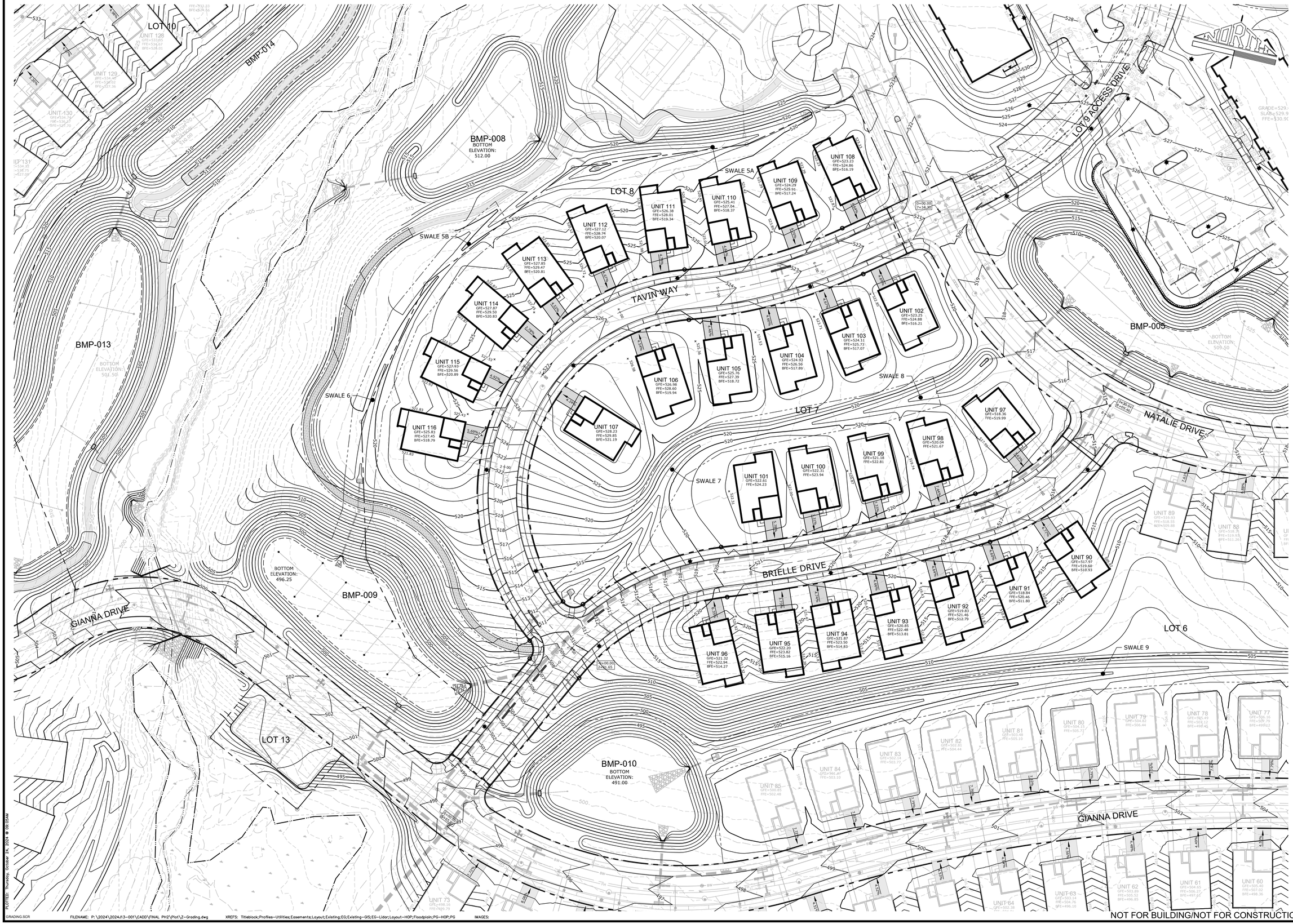

PLOTTED: Thursday, October 24, 2024 @ 09:05AM

GRADING.SCR

FILENAME: P:\2024\2024J13-001\CADD\FINAL PH2\Plot\Z-Grading.dwg

XREFS: Titleblock; Profiles-Utilities; Easements; Layout; Existing; EG; Existing-GIS; EG-Lidar; Layout-HOP; Floodplain; PG-HOP; PG

IMAGES:

NOT FOR BUILDING/NOT FOR CONSTRUCTION

NO	BY	DATE	REVISION

SEAL

SEAL

MANAGER: CHRIS VENARCHICK

DESIGN BY: NGG | CHECKED BY: CV

DRAWN BY: NGG | CHECKED BY: CV

SCALE: 1" = 40' (0', 40', 80', 120')

CLIENT

1376 CAMPUS ROAD ASSOCIATES, LLC
ONE TOWER BRIDGE
100 FRONT STREET, SUITE 560
WEST CONSHOHOCKEN, PA 19428
(571) 276-3184

PROJECT TITLE

1376 CAMPUS ROAD - PHASE 2

FINAL SUBDIVISION & LAND DEVELOPMENT PLAN

MOUNT JOY TOWNSHIP — LANCASTER COUNTY, PA.

SHEET TITLE

GRADING PLAN

Land Planning
Landscape Architecture
Civil Engineering

53 West James Street
Suite 101, Lancaster, PA 17603
(717) 715-1396 FAX: (717) 435-8277

221 W. Philadelphia Street
Suite 108E, York, PA 17401
(717) 854-3805

320 N. Market Street
Suite 550W, Harrisburg, PA 17101
(717) 599-7615

E-mail: info@rgsassociates.com
www.rgsassociates.com

RGS ASSOCIATES

DATE: OCTOBER 24, 2024

PROJECT NO.: 2024J13-001

SHEET NO.: 17 OF 34

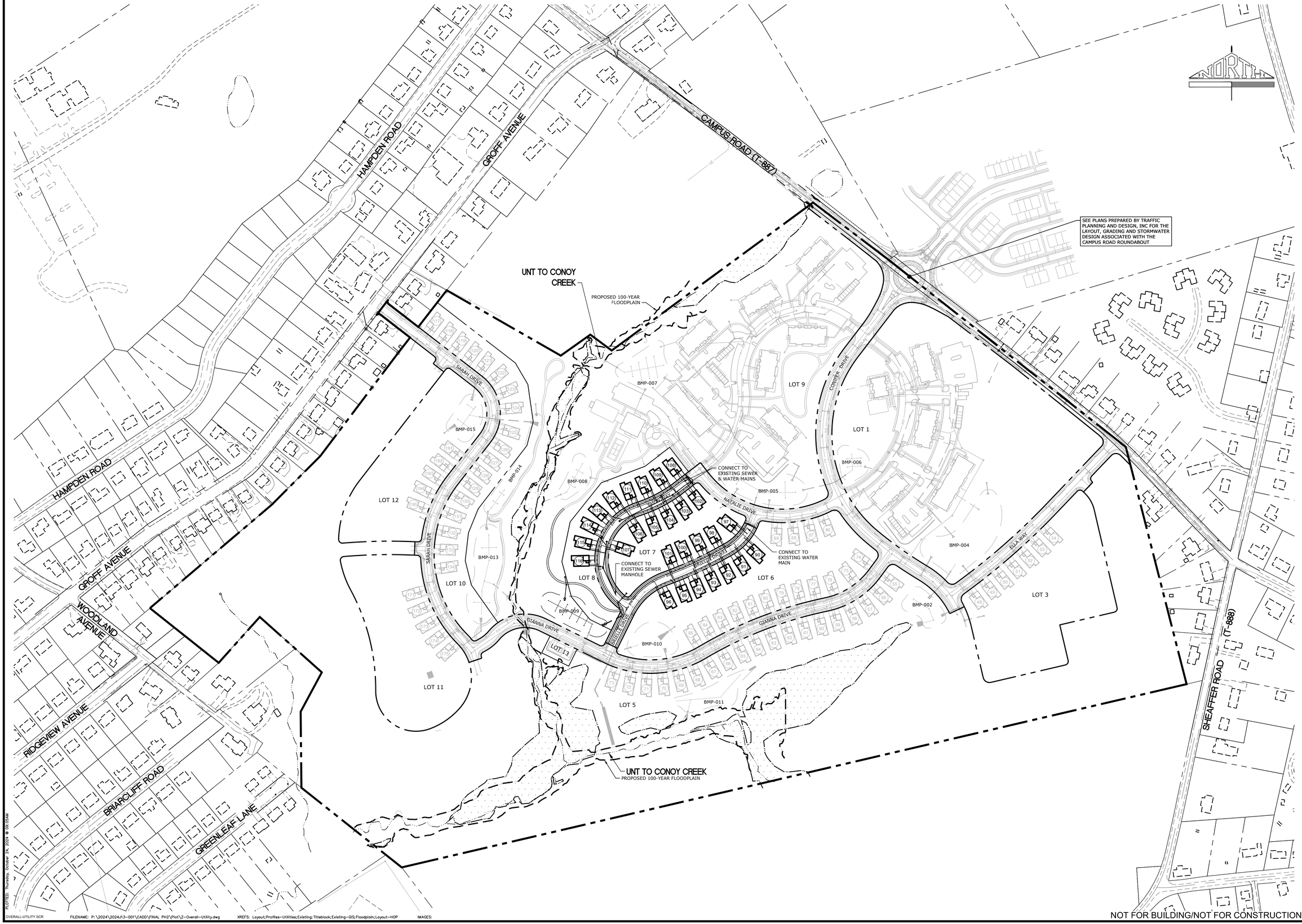

NO	BY	DATE	REVISION

SEAL

SEAL

MANAGER: CHRIS VENARCHICK

DESIGN BY: NGG | CHECKED BY: CV

DRAWN BY: NGG | CHECKED BY: CV

SCALE 1" = 150' (0', 150', 300', 450')

CLIENT

1376 CAMPUS ROAD ASSOCIATES, LLC
ONE TOWER BRIDGE
100 FRONT STREET, SUITE 560
WEST CONSHOHOCKEN, PA 19428
(571) 276-3184

PROJECT TITLE

1376 CAMPUS ROAD - PHASE 2

FINAL SUBDIVISION & LAND DEVELOPMENT PLAN

MOUNT JOY TOWNSHIP LANCASTER COUNTY, PA.

SHEET TITLE

OVERALL UTILITY PLAN

Land Planning
Landscape Architecture
Civil Engineering

53 West James Street
Suite 101, Lancaster, PA 17603
(717) 715-1396 FAX: (717) 435-8277

221 W. Philadelphia Street
Suite 108E, York, PA 17401
(717) 854-3800

320 N. Market Street
Suite 550W, Harrisburg, PA 17101
(717) 599-7615

E-mail: info@rgsassociates.com
www.rgsassociates.com

RGS ASSOCIATES

DATE: OCTOBER 24, 2024

PROJECT NO.: 2024J13-001

SHEET NO.: 18 OF 34

PLOTTED: Thursday, October 24, 2024 @ 09:05AM
OVERALL-UTILITY.SCR
FILENAME: P:\2024\2024J13-001\CADD\FINAL PH2\Plot\Z-Overall-Utility.dwg
XREFS: Layout;Profiles-Utilities;Existing; Titleblock;Existing-GIS;Floodplain;Layout-HOP
IMAGES:

NORTH

LOT 12

LOT 10

LOT 9

LOT 8

LOT 7

LOT 6

LOT 11

LOT 13

LOT 5

LOT 4

LOT 3

PROPOSED WETLAND BUFFER

BOTTOM ELEVATION: 479.50

BOTTOM ELEVATION: 487.20

BOTTOM ELEVATION: 495.00

BOTTOM ELEVATION: 496.50

BOTTOM ELEVATION: 498.75

BOTTOM ELEVATION: 500.00

NOT FOR BUILDING/NOT FOR CONSTRUCTION

NO	BY	DATE	REVISION

SEAL

SEAL

MANAGER: CHRIS VENARCHICK

DESIGN BY: NGG | CHECKED BY: CV

DRAWN BY: NGG | CHECKED BY: CV

SCALE 1" = 40'

0' 40' 80' 120'

CLIENT

1376 CAMPUS ROAD ASSOCIATES, LLC
ONE TOWER BRIDGE
100 FRONT STREET, SUITE 560
WEST CONSHOHOCKEN, PA 19428
(571) 276-3184

PROJECT TITLE

1376 CAMPUS ROAD - PHASE 2

FINAL SUBDIVISION & LAND DEVELOPMENT PLAN

MOUNT JOY TOWNSHIP LANCASTER COUNTY, PA.

SHEET TITLE

UTILITY PLAN

Land Planning
Landscape Architecture
Civil Engineering

33 West James Street
Suite 101, Lancaster, PA 17603
(717) 715-1396 FAX: (717) 435-8277

221 W. Philadelphia Street
Suite 108E, York, PA 17401
(717) 854-3744

320 N. Market Street
Suite 550W, Harrisburg, PA 17101
(717) 599-7615

E-mail: info@rgsassociates.com
www.rgsassociates.com

RGS ASSOCIATES

DATE: OCTOBER 24, 2024

PROJECT NO.: 2024J13-001

SHEET NO.: 19 OF 34

PLOTTED: Thursday, October 24, 2024 @ 09:06AM

UTILITY.SCR

FILENAME: P:\2024\2024J13-001\CADD\FINAL PH2\Plot\Z-Utility.dwg

XREFS: Titleblock;Profiles-Utilities;Easements;Layout;PG;Existing;EG;Existing-GIS;EG-Lidar;Layout-HOP;Floodplain

IMAGES:

NO	BY	DATE	REVISION

SEAL

SEAL

MANAGER: CHRIS VENARCHICK

DESIGN BY: NGG | CHECKED BY: CV

DRAWN BY: NGG | CHECKED BY: CV

SCALE: 1" = 40'

0' 40' 80' 120'

CLIENT

1376 CAMPUS ROAD ASSOCIATES, LLC
ONE TOWER BRIDGE
100 FRONT STREET, SUITE 560
WEST CONSHOHOCKEN, PA 19428
(571) 276-3184

PROJECT TITLE

1376 CAMPUS ROAD - PHASE 2
FINAL SUBDIVISION & LAND DEVELOPMENT PLAN

MOUNT JOY TOWNSHIP LANCASTER COUNTY, PA.

SHEET TITLE

LANDSCAPE PLAN

Land Planning
Landscape Architecture
Civil Engineering
53 West James Street
Suite 101, Lancaster, PA 17603
(717) 715-1396 FAX: (717) 435-8277
221 W. Philadelphia Street
Suite 108E, York, PA 17401
(717) 854-3803
320 N. Market Street
Suite 550W, Harrisburg, PA 17101
(717) 599-7615
E-mail: info@rgsassociates.com
www.rgsassociates.com

RGS ASSOCIATES

DATE: OCTOBER 24, 2024

PROJECT NO.: 2024J13-001

SHEET NO.: 20 OF 34

PLOTTED: Thursday, October 24, 2024 @ 09:07AM
LANDSCAPE.SCR
FILENAME: P:\2024\2024J13-001\CADD\FINAL PH2\Plot\Z-Landscape.dwg
XREFS: Titleblock;Profiles-Utilities;Easements;Landscape;Layout;PG;Existing;EG;Existing-GIS;EG-Lidar;Layout-HOP
IMAGES:

LANDSCAPE CONTRACTOR NOTES:

A. GENERAL PLANTING NOTES:

1. CONTRACTOR SHALL CONTACT PA ONE CALL (8-1-1), AND SHALL VERIFY THE LOCATION OF ALL UNDERGROUND UTILITIES WITHIN THE PROJECT AREA PRIOR TO INSTALLATION OF PLANT MATERIALS.
2. THE LANDSCAPE CONTRACTOR SHALL LOCATE AND VERIFY ALL UNDERGROUND UTILITIES PRIOR TO ANY PLANTING, AND SHALL FIELD-ADJUST THE LOCATIONS OF TREES AND SHRUBS, IF NECESSARY, TO AVOID ANY CONFLICT WITH THESE UTILITIES. **CONTACT THE LANDSCAPE ARCHITECT FOR APPROVAL OF ANY PROPOSED DESIGN CHANGES.**
3. THIS PLAN IS FOR PLANTING INFORMATION ONLY. REFER TO GRADING, UTILITY, SITE LAYOUT AND SEDIMENT EROSION CONTROL PLANS FOR ALL RELATED INFORMATION.
4. ALL PLANTS AND SHRUBS SHALL BE AS SPECIFIED AND INSTALLED IN ACCORDANCE WITH THE DETAILS AND COMMENTS NOTED ON THESE DRAWINGS.
5. PLANT MATERIALS INSTALLED WITHOUT PRIOR APPROVAL ARE SUBJECT TO REPLACEMENT BY THE CONTRACTOR AT HIS/HER EXPENSE IF DETERMINED TO BE UNSATISFACTORY. REJECTED PLANT MATERIALS SHALL BE REMOVED IMMEDIATELY FROM THE PROJECT SITE.
6. PROPOSED LOCATIONS OF ALL NON-HERBACEOUS PLANT MATERIALS AND PLANTING BED OUTLINES SHALL BE STAKED AND OUTLINED IN THE FIELD BY THE **CONTRACTOR FOR APPROVAL BY THE LANDSCAPE ARCHITECT** OR OWNER'S REPRESENTATIVE PRIOR TO PLANTING.
7. THE LANDSCAPE CONTRACTOR SHALL VERIFY ALL GRADES, DIMENSIONS, AND EXISTING CONDITIONS, AND SHALL REPORT ANY IDENTIFIED DISCREPANCIES TO THE LANDSCAPE ARCHITECT. IF SITE WORK HAS BEEN MODIFIED AND DIFFERS FROM INFORMATION SHOWN ON THE APPROVED PLANS, AND POTENTIAL CHANGES TO THE PLANTING DESIGN ARE NECESSARY, THE CONTRACTOR **SHALL CONTACT THE LANDSCAPE ARCHITECT FOR INSTRUCTIONS.**
8. PROCEED WITH WORK ONLY WHEN PRESENT AND FORECASTED WEATHER CONDITIONS PERMIT PLANTING WITHOUT EXCESSIVE SOIL COMPACTION AND/OR UNNECESSARY PLANT DAMAGE.
9. PLANT TREES, SHRUBS, AND OTHER PLANT MATERIALS AFTER FINISHED GRADES ARE ESTABLISHED, AND BEFORE PLANTING ANY TURF AREAS UNLESS OTHERWISE INDICATED.
10. THE CONTRACTOR SHALL VISUALLY INSPECT ALL PLANTING AREAS BEFORE ANY TOPSOIL IS PLACED OR PLANTING BEGINS TO ENSURE ADEQUATE DRAINAGE EXISTS. IF ANY AREAS TO BE PLANTED SHOW EVIDENCE OF POOR DRAINAGE, THE CONTRACTOR **SHALL NOTIFY THE LANDSCAPE ARCHITECT IMMEDIATELY FOR CORRECTIVE ACTION.**
11. REMOVE ANY EXCESS SOIL FROM PLANT ROOT FLARES, IF PRESENT.
12. LANDSCAPE CONTRACTOR SHALL EXERCISE EXTREME CARE WHEN WORKING IN AREAS OF EXISTING VEGETATION THAT IS TO REMAIN AND TO BE PROTECTED. IF SUCH VEGETATION IS INJURED OR DESTROYED DURING CONSTRUCTION, IT SHALL BE REPLACED BY THE LANDSCAPE CONTRACTOR WITH PLANTS OF A SIZE AND SPECIES **AS DETERMINED BY THE LANDSCAPE ARCHITECT,** AND SUCH REPLACEMENT SHALL BE MADE AT NO ADDITIONAL COST TO THE OWNER.
13. PLANT QUANTITIES NOTED ON THE PLANT LIST SHOULD MATCH THE PLANT SYMBOLS SHOWN ON THE DRAWINGS. CONTRACTOR SHALL PROVIDE AND INSTALL ALL PLANT MATERIAL BASED UPON GRAPHIC SYMBOL QUANTITIES AND **SHALL CONTACT THE LANDSCAPE ARCHITECT** IF A DIFFERENCE IS FOUND BETWEEN THE QUANTITIES NOTED IN THE PLANT LIST AND THE DRAWING SYMBOLS.
14. ALL AREAS DISTURBED BY PLANTING OPERATIONS SHALL BE REPAIRED BY THE CONTRACTOR AT HIS/HER EXPENSE, AND TO THE SATISFACTION OF THE OWNER'S REPRESENTATIVE.

B. PLANT STANDARDS

1. ALL TREES SHALL HAVE BEEN NURSERY GROWN IN A CLIMATE SIMILAR TO THAT OF THE FINAL PLANTING SITE.
2. ALL PLANTS SHALL HAVE A NORMAL GROWTH HABIT AND SHALL BE SOUND, HEALTHY, AND VIGOROUS. THEY SHALL BE FREE FROM DISEASE.
3. REQUIREMENTS FOR PLANT MEASUREMENTS, BRANCHING, GRADING, QUALITY, AND BALLING AND BURLAPPING SHALL FOLLOW THE CODE OF STANDARDS AS RECOMMENDED BY THE AMERICAN ASSOCIATION OF NURSERYMEN, INC., IN THE AMERICAN STANDARD FOR NURSERY STOCK, ANSI Z60.1, CURRENT EDITION, AS AMENDED. DO NOT PRUNE TO ATTAIN REQUIRED SIZES.
4. IF FORMAL PLANTING ARRANGEMENTS OR A CONSISTENT ORDER OF PLANTS IS INDICATED ON THE DRAWINGS, SELECT STOCK FOR UNIFORM HEIGHT AND SPREAD.
5. ALL STREET TREES AND SCREENING PLANT MATERIALS SHALL BE INSTALLED DURING THE FIRST PLANTING SEASON FOLLOWING COMPLETION OF OTHER SITE WORK.THE CONTRACTOR SHALL MAINTAIN ALL PLANTINGS PRIOR TO THE BEGINNING OF THE GUARANTEE PERIOD BY WATERING, FERTILIZING, DISEASE CONTROL, PRUNING, AND WEEDING TO KEEP THE COMPLETED WORK AND/OR UNCOMPLETED WORK IN A CLEAN AND NEAT CONDITION AT ALL TIMES.

C. PLANT GUARANTEE

1. ALL MATERIAL SHALL BE GUARANTEED BY INSTALLER FOR THE DURATION OF 12 MONTHS FOLLOWING THE DATE OF PLANTING. NO MORE THAN 1/3 OF THE TREE OR SHRUB SHALL BE DAMAGED OR DEAD WITHOUT REPLACEMENT. REPLACEMENT PLANTS SHALL BE MAINTAINED AFTER REPLAINTING FOR AN ADDITIONAL 18 MONTHS.
2. THE CONTRACTOR SHALL GUARANTEE THAT PLANTS SHALL BE IN VIGOROUS AND THRIVING CONDITION AT THE END OF THE GUARANTEE PERIOD. SHOULD ANY PLANTS APPEAR TO BE IN POOR HEALTH OR LACK NORMAL GROWTH HABIT, AS DETERMINED BY THE LANDSCAPE ARCHITECT, THEY SHALL BE REMOVED AT ONCE AND REPLACED.
3. DURING THE TIME BETWEEN THE INSTALLATION OF PLANTS AND THE BEGINNING OF THE GUARANTEE PERIOD, THE CONTRACTOR SHALL BE FULLY RESPONSIBLE FOR THE SUPERINTENDENCE OF THE PLANTINGS. SHOULD ANY PLANT BE STOLEN OR OTHERWISE REMOVED, ANY SUCH PLANT SHALL BE REPLACED BY THE CONTRACTOR. THE GUARANTEE PERIOD WILL BEGIN WHEN ALL PLANTS ARE INSTALLED AS SHOWN AND SPECIFIED IN THESE PLANS.

D. SOIL PREPARATION:

1. NOTES IN THIS SECTION APPLY TO ALL PLANTING AREAS OTHER THAN LANDSCAPED PCSM BMPS. SOIL PREPARATION REQUIREMENTS FOR PCSM BMPS CAN BE FOUND ON SHEET 33.
2. PRIOR TO PLANTING, THE LANDSCAPE CONTRACTOR SHALL OBTAIN, AND FORWARD TO THE LANDSCAPE ARCHITECT, SOIL AGRONOMY TESTING REPORTS FROM AN APPROVED SOILS LABORATORY SUCH AS PENNSYLVANIA STATE UNIVERSITY'S AGRICULTURAL ANALYTICAL SERVICES LABORATORY. TESTS SHALL BE COMPLETED FOR EACH EXISTING SOIL TYPE AND FOR EACH BATCH OF IMPORTED TOPSOIL. TESTS TO INCLUDE SOIL FERTILITY, PARTICLE SIZE, SAND SEIVE ANALYSIS, ORGANIC MATTER AND SOLUBLE SALTS. CONTRACTOR TO REQUEST SOIL AMENDMENT RECOMMENDATIONS FOR EACH CATEGORY OF TURF AND/OR LANDSCAPE PLANT TO BE INSTALLED IN THE SUBJECT SOIL.
3. ALL SOIL AMENDMENTS SHALL BE INSTALLED PER THE SOIL AGRONOMY REPORT, AND SHALL BE PROVIDED BY THE LANDSCAPE CONTRACTOR.
4. PERENNIAL, ANNUAL AND BULB PLANTING AREAS SHALL HAVE AMENDED SOILS AS FOLLOWS FOR EACH 100 S.F. AREA:
   6 CU. FT. OF CLEAN COMPOST
   5-6 LBS. MILORGANITE OR EQUAL
   2-3 LBS. OF 0-20-20 FERTILIZER
5. AGRIFORM 20-10-5 PLANTING TABLETS OR EQUIVALENT SHALL BE USED FOR ALL TREE AND SHRUB PLANTINGS PER THE MANUFACTURER'S SPECIFICATIONS. TABLETS ARE NOT A REPLACEMENT FOR AMENDMENTS REQUIRED BY THE SOIL AGRONOMY TEST RESULTS.
6. APPLY AMENDMENTS ON-SITE, AND MIX SOIL TO FULLY ADDRESS ALL EXISTING SOIL DEFICIENCIES. DO NOT APPLY AMENDMENTS NOR TILL IF EXISTING SOIL OR SUBGRADE IS FROZEN, MUDDY, OR EXCESSIVELY WET.
7. LANDSCAPE PLANTING AREAS SHALL BE FREE OF ANY DELETERIOUS MATERIAL OR LIQUID SUCH AS PAINT, PAINT WASHOUT, CONCRETE SLURRY, CONCRETE RUBBLE, CEMENT, PLASTER, OILS, GASOLINE, DIESEL FUEL, PAINT THINNER, TURPENTINE TAR, ROOFING COMPOUND, ACID, AND STONES LARGER THAN 3" IN ANY DIRECTION.
8. TOPSOIL SHALL BE PLACED AT A MINIMUM DEPTH OF 6".
9. IN ALL PLANTING AREAS. IF INSUFFICIENT TOPSOIL IS PRESENT PRIOR TO PLANTING, THE SITE CONTRACTOR SHALL PROVIDE AND PLACE THE REQUIRED TOPSOIL AT THE LANDSCAPE CONTRACTOR'S REQUEST. THE TOPSOIL SHALL BE ROUGH GRADED BY THE SITE CONTRACTOR AND FINISH GRADED BY THE LANDSCAPE CONTRACTOR.
10. CONTRACTOR SHALL KILL OFF ANY EXISTING TURF AND UNWANTED VEGETATION WITHIN PROPOSED BED LIMITS. COMPLETE REMOVAL OF TURF BY MEANS OF A SOD CUTTER OR SCUFFING IS AN ACCEPTABLE ALTERNATIVE METHOD TO HERBICIDE APPLICATION. IF HERBICIDE IS NOT USED, THE CONTRACTOR SHALL COMPLETELY REMOVE ALL EXISTING PLANT ROOTS.

E. MULCH:

1. THE CONTRACTOR MAY APPLY A PRE-EMERGENT HERBICIDE PER THE MANUFACTURERS SPECIFICATIONS TO THE ENTIRE PLANTING BED FOR CONTROL OF WEED GERMINATION.
2. A LAYER OF NATURAL, NON-COLORED ORGANIC MULCH SHALL BE APPLIED ACROSS THE ENTIRE PLANTING BED AREA UNLESS OTHERWISE INDICATED ON THE PLAN. MULCH DEPTH SHALL NOT BE GREATER THAN 3" NOR LESS THAN 2".
3. MULCH SHALL BE ORGANIC, DOUBLE-CUT, NATURAL, UN-DYED AND FREE FROM DELETERIOUS MATERIALS.
4. MULCH SHALL NOT COVER THE CROWNS OF ANY HERBACEOUS PLANTS, NOR THE ROOT FLARES OF ANY WOODY PLANTS.

F. SEED/SOD ESTABLISHMENT NOTES:

1. GRASS SEED SHALL BE FRESH, CLEAN, DRY, NEW-CROP SEED COMPLYING WITH AOSA'S "RULING FOR TESTING SEEDS" FOR PURITY AND GERMINATION TOLERANCES.
2. TURFGRASS SOD SHALL COMPLY WITH 'SPECIFICATIONS FOR TURFGRASS SOD MATERIALS' IN TPI GUIDELINE SPECIFICATIONS TO TURFGRASS SODDING. TURFGRASS SOD SHALL BE A VIABLE SOD OF UNIFORM DENSITY, COLOR, AND TEXTURE. IT SHALL BE STRONGLY ROOTED AND CAPABLE OF VIGOROUS GROWTH AND DEVELOPMENT.
3. RECOMMENDED TIME OF TURFGRASS SEEDING IS SEPTEMBER 1ST TO OCTOBER 15TH. WHERE SPRING SEEDINGS ARE NECESSARY, SEED NO LATER THAN APRIL 1ST FOR BEST RESULTS.
4. SOW RECOMMENDED SEED MIXTURE ADAPTED TO USE IN CLIMATIC CONDITIONS OF THE SPECIFIC SITE AREA.
5. PRIOR TO SEEDING AND/OR SODDING, REMOVE ANY EXISTING VEGETATION FROM PROPOSED LAWN AREAS.
6. EXCESS DEAD VEGETATION SHOULD BE TURNED UNDER, IF THE SITE IS NOT TOO WET FOR TILLING WITHOUT EXCESSIVE SOIL COMPACTION.
7. IF TOPSOIL HAS BEEN DEPLETED OR REMOVED IN THE AREA TO BE SEEDED OR SODDED, PROVIDE SOIL AMENDMENTS PER THE SOIL AGRONOMY REPORT.
8. DIVIDE TOTAL SEED QUANTITY INTO TWO EQUAL LOTS. SOWING ONE LOT IN ONE DIRECTION, AND THE SECOND LOT AT RIGHT ANGLES TO THE FIRST WITH A MECHANICAL SEEDER OR SPREADER.
9. EXTRA CARE SHALL BE TAKEN TO ELIMINATE DEPRESSIONS OR AIR POCKETS BY ROLLING OR TAMPING LAWN BASE BEFORE INSTALLATION. ALL SOD MUST BE DELIVERED AND INSTALLED WITHIN 36 HOURS OF BEING CUT. SOD SHALL BE LAID SMOOTHLY, EDGE TO EDGE WITH STAGGERED JOINTS. IMMEDIATELY AFTER INSTALLATION, THE SOD SHALL BE WATERED TO A DEPTH OF 4" INTO THE SOIL.
10. MULCHING WITH STRAW, HYDROMULCH, OR FIBER MATS IS RECOMMENDED TO PROTECT SEED FROM DRYING OUT OR WASHING AWAY. HEAVY MULCHES SHOULD BE REMOVED FROM THE AREA WITHIN A FEW DAYS AFTER SEED GERMINATION.
11. BOUNDARIES OF NEWLY SEEDED AREAS SHALL BE WELL DEFINED WITH SIGNS OR OTHER MARKERS TO DETER INTRUSION UNTIL LAWN AREAS ARE FULLY ESTABLISHED.
12. CONTRACTOR IS RESPONSIBLE FOR TURF MAINTENANCE UNTIL SATISFACTORY TURF IS ESTABLISHED, AS DETERMINED BY THE LANDSCAPE ARCHITECT. MAINTENANCE TO INCLUDE WATERING, FERTILIZING, WEEDING, MOWING, TRIMMING, REPLANTING, AND PERFORMING OTHER OPERATIONS AS REQUIRED TO ESTABLISH HEALTHY, VIABLE TURF. ROLL, REGRADE, AND REPLANT BARE OR ERODED AREAS AND REMULCH TO PRODUCE A UNIFORMLY SMOOTH TURF. PROVIDE MATERIALS AND INSTALLATION THE SAME AS THOSE USED IN THE ORIGINAL INSTALLATION.
    a. FILL IN AS NECESSARY SOIL SUBSIDENCE THAT MAY OCCUR BECAUSE OF SETTLING OR OTHER PROCESSES. REPLACE MATERIALS AND TURF DAMAGED OR LOST IN AREAS OF SUBSIDENCE.
    b. IN AREAS WHERE MULCH HAS BEEN DISTURBED BY WIND OR MAINTENANCE OPERATIONS, ADD NEW MULCH AND ANCHOR AS REQUIRED TO PREVENT DISPLACEMENT.
    c. APPLY TREATMENTS AS REQUIRED TO KEEP TURF AND SOIL FREE OF PESTS AND PATHOGENS OR DISEASE. USE INTEGRATED PEST MANAGEMENT PRACTICES WHENEVER POSSIBLE TO MINIMIZE THE USE OF PESTICIDES AND REDUCE HAZARDS.
13. WATERING: INSTALL AND MAINTAIN TEMPORARY PIPING, HOSES, AND TURF-WATERING EQUIPMENT TO CONVEY WATER FROM SOURCES AND TO KEEP TURF UNIFORMLY MOIST TO A DEPTH OF 4 INCHES.
    a. SCHEDULE WATERING TO PREVENT WILTING, PUDDLING, EROSION, AND DISPLACEMENT OF SEED OR MULCH. LAY OUT TEMPORARY WATERING SYSTEM TO AVOID WALKING OVER MUDDY OR NEWLY PLANTED AREAS.
    b. WATER TURF WITH FINE SPRAY AT A MINIMUM RATE OF 1 INCH PER WEEK UNLESS RAINFALL PRECIPITATION IS ADEQUATE.
14. MOW TURF AS SOON AS TOP GROWTH IS TALL ENOUGH TO CUT. REPEAT MOWING TO MAINTAIN SPECIFIED HEIGHT WITHOUT CUTTING MORE THAN ONE-THIRD OF GRASS HEIGHT. REMOVE NO MORE THAN ONE-THIRD OF GRASS-LEAF GROWTH IN INITIAL OR SUBSEQUENT MOWINGS. DO NOT DELAY MOWING UNTIL GRASS BLADES BEND OVER AND BECOME MATTED. DO NOT MOW WHEN GRASS IS WET.
15. TURF POSTFERTILIZATION: APPLY FERTILIZER AFTER INITIAL MOWING AND WHEN GRASS IS DRY. USE FERTILIZER THAT PROVIDES ACTUAL NITROGEN OF AT LEAST 1 LB/1000 SQ. FT. TO TURF AREA.
16. SATISFACTORY TURF - TURF INSTALLATIONS SHALL MEET THE FOLLOWING CRITERIA AS DETERMINED BY LANDSCAPE ARCHITECT/ENGINEER: AT END OF MAINTENANCE PERIOD, A HEALTHY, UNIFORM, CLOSE STAND OF GRASS HAS BEEN ESTABLISHED, FREE OF WEEDS AND SURFACE IRREGULARITIES, WITH COVERAGE EXCEEDING 90 PERCENT OVER ANY 10 SQ. FT. AND BARE SPOTS NOT EXCEEDING 5 BY 5 INCHES.
17. CONTRACTOR TO USE SPECIFIED MATERIALS TO REESTABLISH TURF THAT DOES NOT COMPLY WITH REQUIREMENTS, AND CONTINUE MAINTENANCE UNTIL TURF IS SATISFACTORY.

G. PLUG INSTALLATION NOTES:

1. PRIOR TO FINAL SEEDING/PLANTING OF THE STORMWATER MANAGEMENT FACILITIES, THE CONTRACTOR SHALL PROVIDE POST-CONSTRUCTION INFILTRATION TESTING IN THE BIO-RETENTION FACILITIES TO DETERMINE ACTUAL DEWATERING RATES. RESULTS TO BE PROVIDED TO PROJECT'S LANDSCAPE ARCHITECT AND/OR CIVIL ENGINEER WHO WILL THEN RECOMMEND ANY REQUIRED ADJUSTMENTS TO PROPOSED PLANTINGS. FINAL PLANT SPECIES SELECTIONS MAY BE MODIFIED AS NECESSARY BASED UPON ACTUAL FIELD-CONDITION INFILTRATION RATES.
2. PLUGS SHALL ONLY BE INSTALLED WHEN THEY ARE IN ACTIVE GROWTH. PROPER INSTALLATION PERIODS VARY BY SPECIES. CONSULT PLANT SUPPLIER FOR GUIDANCE ON PLANTING PERIODS AND TIMING. INSTALLATION OUTSIDE OPTIMAL PLANTING PERIODS COULD RESULT IN PLANT LOSS.
3. PROCEED WITH WORK ONLY WHEN PRESENT AND FORECASTED WEATHER CONDITIONS PERMIT PLANTING WITHOUT EXCESSIVE SOIL COMPACTION AND/OR UNNECESSARY PLANT DAMAGE. AVOID PLANTING IN EXCESSIVELY MOIST CONDITIONS UNLESS PLANTING IN HYDRIC SOILS.
4. CONTRACTOR TO LAYOUT AND INSTALL PLUGS AS SOON AS POSSIBLE FOLLOWING PLANT DELIVERY TO SITE.
5. IF PLANTING MUST BE DELAYED DUE TO WEATHER OR CONSTRUCTION DELAYS, MOVE PLUGS TO A PROTECTED AND SHADED AREA. IRRIGATE AS NEEDED.
6. THOROUGHLY WATER PLUG TRAYS PRIOR TO PLUG REMOVAL AND PLANTING.
7. PLUG SPECIES ARE TO BE DISTRIBUTED ACROSS THE FACILITY AT THE SPECIFIED SPACING, AND SHALL BE COMBINED WITH OTHER SPECIES (IF SO NOTED) IN A RANDOM FASHION.
8. FOR PLANTING AREAS TO BE MULCHED, APPLY MULCH PRIOR TO INSTALLATION OF THE PLUGS.
9. WHERE APPLICABLE, SECURE EROSION CONTROL MATTING PRIOR TO PLANTING. PLANT PLUGS DIRECTLY THROUGH THE EROSION CONTROL MATTING.
10. CONTRACTOR SHALL ONLY REMOVE PLUGS FROM TRAYS BY PUSHING PLANTS UP THROUGH THE BOTTOM OF THE LINER. DO NOT PULL THE PLANTS BY THEIR FOLIAGE.
11. CONTRACTOR SHALL NOT 'TEASE' THE PLUG ROOT SYSTEMS APART AS IS CUSTOMARY WITH OTHER CONTAINERIZED PLANTS WITH DENSE ROOT SYSTEMS.
12. PLUGS SHALL BE PLANTED SO THAT THE TOP OF THE PLUG SOIL MEDIA IS FLUSH WITH THE FINISHED GRADE. LIGHTLY TAMP SURROUNDING SOIL TO INCREASE SOIL-ROOT CONTACT AND TO MINIMIZE FROST HEAVING POTENTIAL.
13. PLUGS SHALL BE WATERED IMMEDIATELY FOLLOWING PLANTING TO REDUCE AIR POCKETS AND TO MAXIMIZE CONTACT BETWEEN THE PLUG ROOTS AND PREPARED SOIL.
14. MONITOR NEW PLANTINGS FOR SIGNS OF DISEASES, PESTS AND WATER STRESS.
15. KEEP NEW PLANTINGS FREE OF UNDESIRABLE AND INVASIVE SPECIES.
16. CONTRACTOR SHALL REMOVE ALL CUT VEGETATION TO ENSURE STORMWATER MANAGEMENT CONTROL STRUCTURES ARE KEPT CLEAR AND FREE OF DEBRIS.

PLANT SCHEDULE

TREES - DECIDUOUS	QTY	BOTANICAL NAME	COMMON NAME	SIZE	CONTAINER
Gt	23	Gleditsia triacanthos f. inermis	Thornless Honey Locust	2" - 2.5" Cal.	B&B
Ls2	1	Liquidambar rotundiloba	Sweet Gum	2" - 2.5" Cal.	B&B
Qr	4	Quercus rubra	Red Oak	2" - 2.5" Cal.	B&B
Ta	10	Tilia americana	American Linden	2" - 2.5" Cal.	B&B
TREES - EVERGREEN	**QTY**	**BOTANICAL NAME**	**COMMON NAME**	**SIZE**	**CONTAINER**
Ps	3	Pinus strobus	White Pine	2" - 2.5" Cal.	B&B
TREES - ORNAMENTAL	**QTY**	**BOTANICAL NAME**	**COMMON NAME**	**SIZE**	**CONTAINER**
Cc	3	Cercis canadensis	Eastern Redbud	2" Cal.	B&B

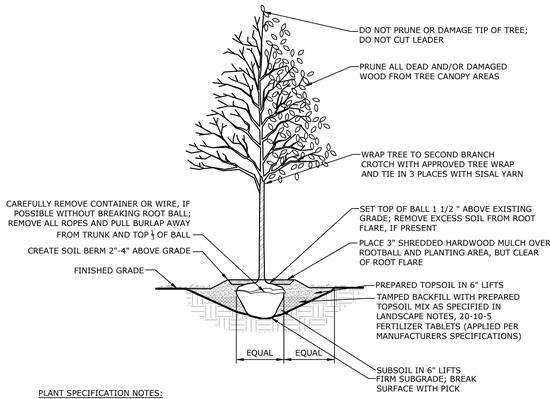

PLANT SPECIFICATION NOTES:

1. ALL TREES SHALL HAVE BEEN NURSERY GROWN IN A CLIMATE SIMILAR TO THAT OF THE FINAL PLANTING SITE.
2. ALL TREES SHALL HAVE A NORMAL GROWTH HABIT AND SHALL BE SOUND, HEALTHY, AND VIGOROUS; THEY SHALL BE FREE FROM DISEASE, INSECTS, INSECT EGGS, AND LARVAE.
3. ALL PLANTING SHALL BE PERFORMED IN CONFORMANCE WITH GOOD NURSERY AND LANDSCAPE PRACTICE.
4. REQUIREMENTS FOR TREE MEASUREMENTS, BRANCHING, GRADING, QUALITY, BALLING, AND BURLAPPING SHALL FOLLOW THE CODE OF STANDARDS RECOMMENDED BY THE AMERICAN ASSOCIATION OF NURSERYMEN, INC., IN THE AMERICAN STANDARD FOR NURSERY STOCK, ANSIZ60, CURRENT EDITION, AS AMENDED.
5. SEE LANDSCAPE NOTES FOR REQUIRED SOIL TESTING, PREPARATION AND AMENDMENT.
6. THE TOP OF THE MAIN ORDER ROOT (FIRST LARGE SET OF ROOTS THAT DIVIDE FROM THE TRUNK) SHALL BE PLANTED NO LOWER THAN ONE OR TWO INCHES INTO THE SOIL.

1 TYPICAL DECIDUOUS TREE PLANTING DETAIL

NOT TO SCALE

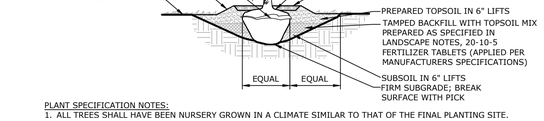

PLANT SPECIFICATION NOTES:

1. ALL TREES SHALL HAVE BEEN NURSERY GROWN IN A CLIMATE SIMILAR TO THAT OF THE FINAL PLANTING SITE.
2. ALL TREES SHALL HAVE A NORMAL GROWTH HABIT AND SHALL BE SOUND, HEALTHY AND VIGOROUS; THEY SHALL BE FREE FROM DISEASE, INSECTS, INSECT EGGS, AND LARVAE.
3. ALL PLANTING SHALL BE PERFORMED IN CONFORMANCE WITH GOOD NURSERY AND LANDSCAPE PRACTICE.
4. REQUIREMENTS FOR TREE MEASUREMENTS, BRANCHING, GRADING, QUALITY, BALLING, AND BURLAPPING SHALL FOLLOW THE CODE OF STANDARDS RECOMMENDED BY THE AMERICAN ASSOCIATION OF NURSERYMEN, INC., IN THE AMERICAN STANDARD FOR NURSERY STOCK, ANSIZ60, CURRENT EDITION, AS AMENDED.
5. STABILIZATION (STAKING) OF TREES SHALL ONLY BE PERMITTED IN THE EVENT THAT SITE OR TREE CONDITIONS ARE ANTICIPATED TO BE UNSTABLE.
6. THE TOP OF THE MAIN ORDER ROOT (FIRST LARGE SET OF ROOTS THAT DIVIDE FROM THE TRUNK) SHALL BE PLANTED NO LOWER THAN ONE OR TWO INCHES INTO THE SOIL.

2 TYPICAL EVERGREEN TREE- PLANTING DETAIL

NOT TO SCALE

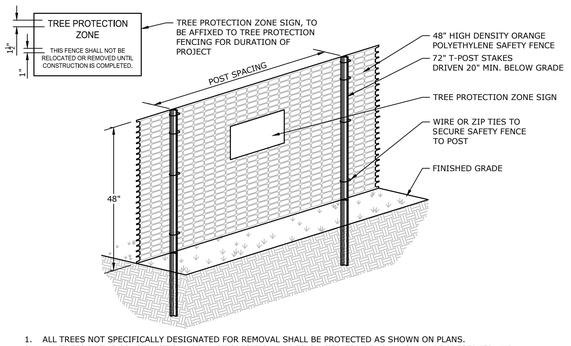

1. ALL TREES NOT SPECIFICALLY DESIGNATED FOR REMOVAL SHALL BE PROTECTED AS SHOWN ON PLANS.
2. ALL TREES IN THE CONSTRUCTION AREA NOT SPECIFICALLY DESIGNATED FOR REMOVAL SHALL BE PRESERVED AND PROTECTED WITH ORANGE POLYETHYLENE SAFETY/CONSTRUCTION FENCE. INSTALL ORANGE CONSTRUCTION FENCE OUTSIDE THE TREE PROTECTION ZONE (TPZ) NOTED ON THE PLANS, SEE SHEET 3. ORANGE CONSTRUCTION FENCE SHOULD BE FASTENED SECURELY TO THE T-POSTS.
3. ALL TREES NOT SPECIFICALLY DESIGNATED FOR REMOVAL SHALL BE PROTECTED AS SHOWN ON THE PLAN.
4. THE FENCING MUST REMAIN IN PLACE DURING ALL PHASES OF CONSTRUCTION. ANY CHANGE OF THE PROTECTIVE FENCING MUST BE APPROVED BY **THE LANDSCAPE ARCHITECT**.
5. POST SPACING TO BE INSTALLED PER MANUFACTURER SPECIFICATIONS.

3 TREE PROTECTION ZONE (TPZ) FENCE DETAIL

NOT TO SCALE

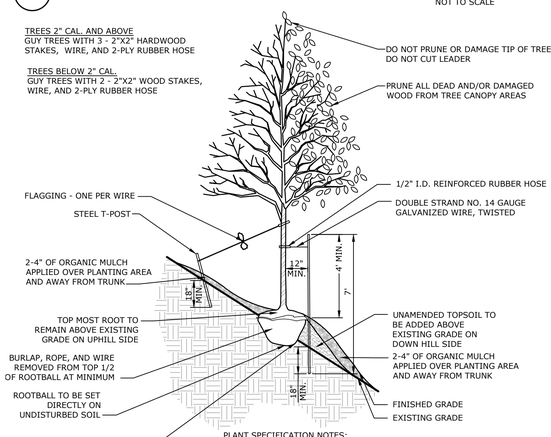

PLANT SPECIFICATION NOTES:

1. ANY STAKING OR WIRING OF TREES MUST BE REMOVED WITHIN ONE YEAR OF PLANTING.
2. THE TOP OF THE MAIN ORDER ROOT (FIRST LARGE SET OF ROOTS THAT DIVIDE FROM THE TRUNK) SHALL BE PLANTED NO LOWER THAN ONE OR TWO INCHES INTO THE SOIL.

4 TYPICAL DECIDUOUS/EVERGREEN TREE PLANTING DETAIL FOR STEEP SLOPES

NOT TO SCALE

NOT FOR BUILDING/NOT FOR CONSTRUCTION

NO	BY	DATE	REVISION

SEAL

SEAL

MANAGER: CHRIS VENARCHICK
DESIGN BY: NGG | CHECKED BY: CV
DRAWN BY: NGG | CHECKED BY: CV

SCALE: N.T.S.

CLIENT
1376 CAMPUS ROAD ASSOCIATES, LLC
ONE TOWER BRIDGE
100 FRONT STREET, SUITE 560
WEST CONSHOHOCKEN, PA 19428
(571) 276-3184

PROJECT TITLE
1376 CAMPUS ROAD - PHASE 2
FINAL SUBDIVISION & LAND DEVELOPMENT PLAN
MOUNT JOY TOWNSHIP | LANCASTER COUNTY, PA.

SHEET TITLE
LANDSCAPE NOTES & DETAILS

Land Planning
Landscape Architecture
Civil Engineering
83 West James Street
Suite 101, Lancaster, PA 17603
(717) 715-1396 FAX (717) 435-8277
221 W. Philadelphia Street
Suite 108E, York, PA 17401
(717) 854-3805
321 N. Mario Street
Suite 209W, Harrisburg, PA 17101
(717) 599-7615
E-mail: info@rgsassociates.com
www.rgsassociates.com
RGS ASSOCIATES

DATE: OCTOBER 24, 2024
PROJECT NO.: 2024J13-001
SHEET NO.: 21 OF 34

PLOTTED: Thursday, October 24, 2024 @ 09:07AM
FILENAME: P:\2024\2024J13-001\CADD\FINAL PH2\Plot\Z-Landscape-Details.dwg XREFS: Details;Titleblock IMAGES:

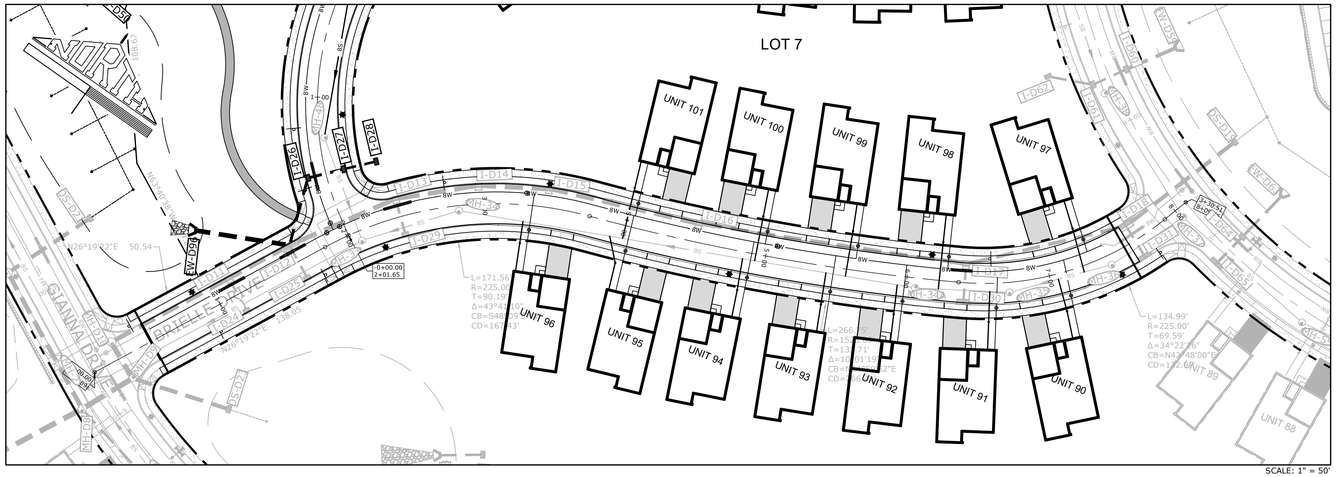
LOT 7
UNIT 101
UNIT 100
UNIT 99
UNIT 98
UNIT 97
UNIT 96
UNIT 95
UNIT 94
UNIT 93
UNIT 92
UNIT 91
UNIT 90
UNIT 89
UNIT 88
NORTH
BRIELLE DRIVE
GIANNA DRIVE
NATALIE DRIVE
0+00.00
2+01.65
L=171.56'
R=225.00'
T=90.19'
Δ=43°41'00"
CB=S48°
CD=167.43'
L=266.
R=15
T=1
Δ=1
CB=
CD=
L=134.99'
R=225.00'
T=69.59'
Δ=34°22'35"
CB=N42°48'00"E
CD=132.98'
S26°19'22"E 50.54'
N26°19'22"W 50.54'
8W
6W
4W
CHF-D29
CHF-D30
CHF-D31
CHF-D32
CHF-D33
CHF-D34
CHF-D35
CHF-D36
CHF-D37
CHF-D38
CHF-D39
CHF-D40
CHF-D41
CHF-D42
CHF-D43
CHF-D44
CHF-D45
CHF-D46
CHF-D47
CHF-D48
CHF-D49
CHF-D50
CHF-D51
CHF-D52
CHF-D53
CHF-D54
CHF-D55
CHF-D56
CHF-D57
CHF-D58
CHF-D59
CHF-D60
CHF-D61
CHF-D62
CHF-D63
CHF-D64
CHF-D65
CHF-D66
CHF-D67
CHF-D68

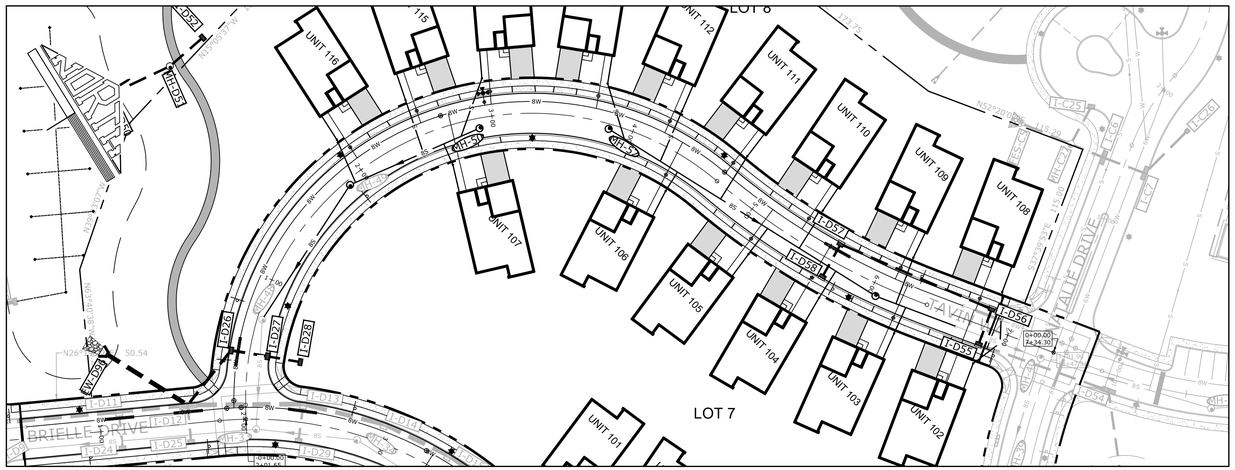
LOT 8
LOT 7
UNIT 116
UNIT 115
UNIT 112
UNIT 111
UNIT 110
UNIT 109
UNIT 108
UNIT 107
UNIT 106
UNIT 105
UNIT 104
UNIT 103
UNIT 102
UNIT 101
TAVIN WAY
BRIELLE DRIVE
NORTH
I-D24
I-D25
I-D26
I-D27
I-D28
I-D29
I-D30
I-D31
I-D32
I-D33
I-D34
I-D35
I-D36
I-D37
I-D38
I-D39
I-D40
I-D41
I-D42
I-D43
I-D44
I-D45
I-D46
I-D47
I-D48
I-D49
I-D50
I-D51
I-D52
I-D53
I-D54
I-D55
I-D56
I-D57
I-D58
I-C25
I-C26
I-C27
I-C28
I-C29
I-C30
I-C31
I-C32
I-C33
I-C34
I-C35
I-C36
I-C37
I-C38
I-C39
I-C40
I-C41
I-C42
I-C43
I-C44
I-C45
I-C46
I-C47
I-C48
I-C49
I-C50
I-C51
I-C52
I-C53
I-C54
I-C55
I-C56
I-C57
I-C58
I-C59
I-C60
I-C61
I-C62
I-C63
I-C64

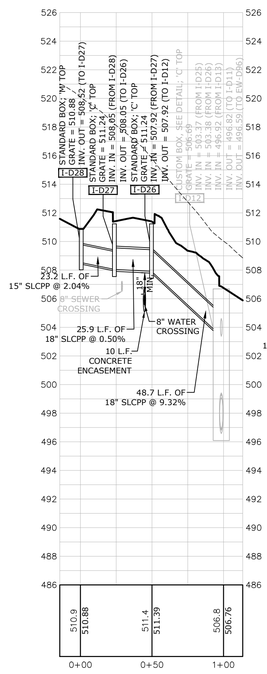

I-D28 TO I-D12
HORZ. SCALE: 1"=50'
VERT. SCALE: 1"= 5'

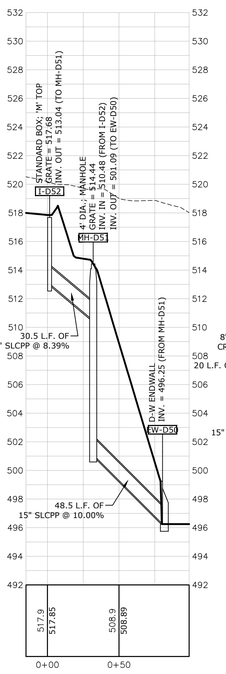

I-D52 TO EW-D50
HORZ. SCALE: 1"=50'
VERT. SCALE: 1"= 5'

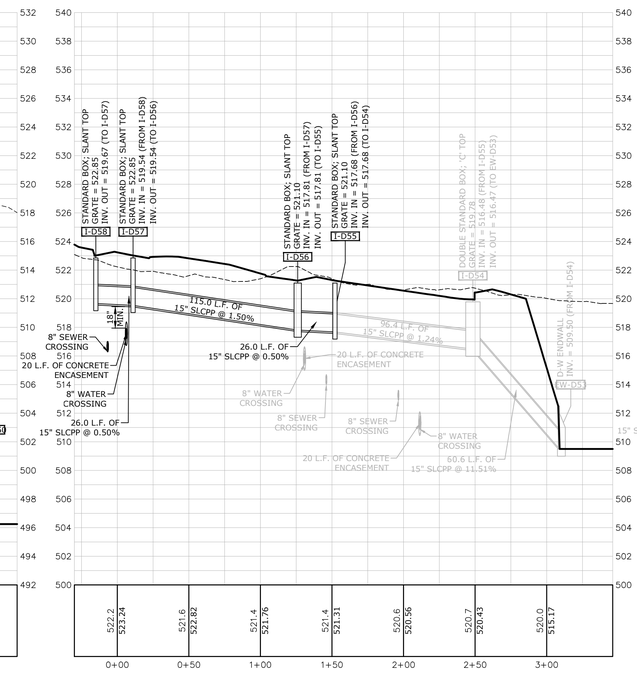

I-D58 TO EW-D53
HORZ. SCALE: 1"=50'
VERT. SCALE: 1"= 5'

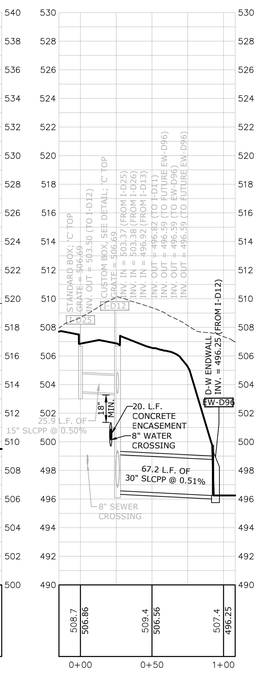

I-D25 TO EW-D96
HORZ. SCALE: 1"=50'
VERT. SCALE: 1"= 5'

LEGEND

EXISTING GRADE — PROPOSED GRADE

NOT FOR BUILDING/NOT FOR CONSTRUCTION

NO	BY	DATE	REVISION

SEAL

SEAL

MANAGER: CHRIS VENARCHICK

DESIGN BY: OLH | CHECKED BY: CV

DRAWN BY: OLH | CHECKED BY: CV

SCALE: AS NOTED

CLIENT
1376 CAMPUS ROAD ASSOCIATES, LLC
ONE TOWER BRIDGE
100 FRONT STREET, SUITE 560
WEST CONSHOHOCKEN, PA 19428
(571) 276-3184

PROJECT TITLE
1376 CAMPUS ROAD - PHASE 2
FINAL SUBDIVISION &
LAND DEVELOPMENT PLAN
MOUNT JOY TOWNSHIP LANCASTER COUNTY, PA.

SHEET TITLE
STORMWATER PROFILES

Land Planning
Landscape Architecture
Civil Engineering
53 West James Street
Suite 101, Lancaster, PA 17603
(717) 715-1396 FAX (717) 435-8277
221 W. Philadelphia Street
Suite 108E, York, PA 17401
(717) 854-3615
320 N. Market Street
Suite 550W, Harrisburg, PA 17101
(717) 599-7615
E-mail: info@rgsassociates.com
www.rgsassociates.com
RGS ASSOCIATES

DATE: OCTOBER 24, 2024
PROJECT NO.: 2024J13-001

SHEET NO.: 24 OF 34

PLOTTED: Thursday, October 24, 2024 @ 09:09AM
FILENAME: P:\2024\2024J13-001\CADD\FINAL PH2\Plot\Z-Profiles.dwg XREFS: Existing;Profiles-Utilities;Layout; Titleblock IMAGES:

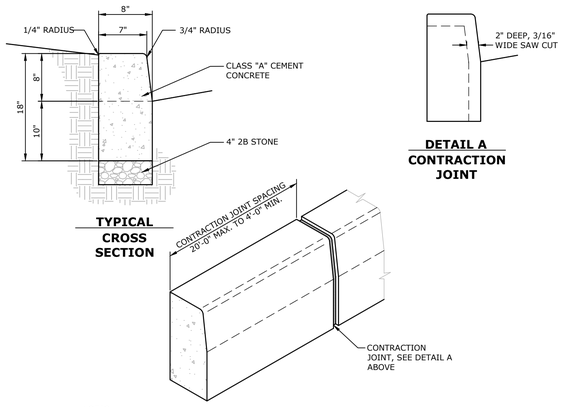

TYPICAL CROSS SECTION

DETAIL A CONTRACTION JOINT

NOTES:
1. EXPANSION JOINTS SHALL CONSIST OF 1/2" THICK PREMOLDED EXPANSION JOINT FILLER MATERIAL. EXPANSION JOINTS SHALL BE LOCATED AT ALL STRUCTURES AT THE END OF THE WORK DAY AND AT INTERVALS OF 100 FEET. CUT MATERIAL TO CONFORM WITH CROSS SECTIONAL AREA OF CURB.
2. CONTRACTION JOINTS SHALL CONSIST OF A 2" DEEP, 3/16" WIDE SAW CUT AND BE PLACED AT UNIFORM LENGTHS OF 20 FOOT INTERVALS MAXIMUM AND 4 FOOT INTERVALS MINIMUM.

1 8" PLAIN CEMENT CONCRETE CURB DETAIL

NOT TO SCALE

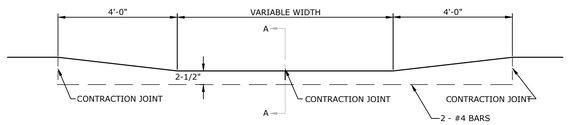

DEPRESSED CURB AREA

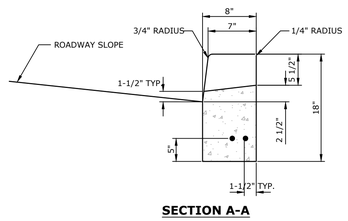

SECTION A-A

2 DEPRESSED CURB

NOT TO SCALE

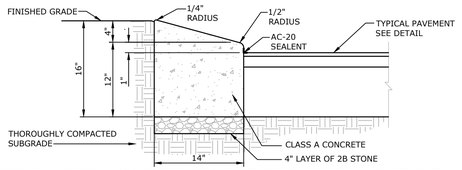

NOTES:
1. EXPANSION JOINTS SHALL CONSIST OF 1/2" THICK PREMOLDED EXPANSION JOINT FILLER MATERIAL. EXPANSION JOINTS SHALL BE LOCATED AT ALL STRUCTURES AT THE END OF THE WORK DAY AND AT INTERVALS OF 100 FEET. CUT MATERIAL TO CONFORM WITH CROSS SECTIONAL AREA OF CURB.
2. CONTRACTION JOINTS SHALL CONSIST OF A 2" DEEP, 3/16" WIDE SAW CUT AND BE PLACED AT UNIFORM LENGTHS OF 20 FOOT INTERVALS MAXIMUM AND 4 FOOT INTERVALS MINIMUM.
3. AC-20 SEALANT TO BE APPLIED ALONG JOINTS BETWEEN PAVEMENT AND CURB.

3 CONCRETE SLANT CURB DETAIL

NOT TO SCALE

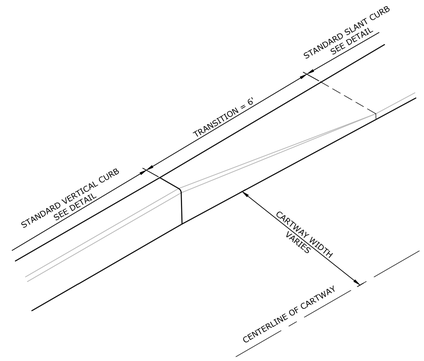

4 TRANSITION FROM SLANT CURB TO VERTICAL CURB

NOT TO SCALE

NOTES:
1. POSITIVE DRAINAGE SHALL BE PROVIDED AROUND EVERY BUILDING TO PROVIDE BYPASS IN THE EVENT THAT SUMPED AREAS BECOME CLOGGED.
2. THE LOT GRADING AND FINISHED GRADE ELEVATION (FG) SHOWN FOR EACH LOT IS TO SHOW FEASIBILITY ONLY. THE INDIVIDUAL LOT GRADING CAN BE REVISED FOR EACH HOME. THE CONTRACTOR AND HOME BUILDER ARE RESPONSIBLE FOR MAINTAINING THE DRAINAGE PATTERN AS SHOWN ON THESE PLANS AND FOR MAINTAINING POSITIVE DRAINAGE AWAY FROM ALL BUILDINGS AND A MINIMUM SLOPE ON ALL GRASS AREAS. ANY REVISIONS SHALL BE REFLECTED IN THE BUILDING PERMIT APPLICATION.

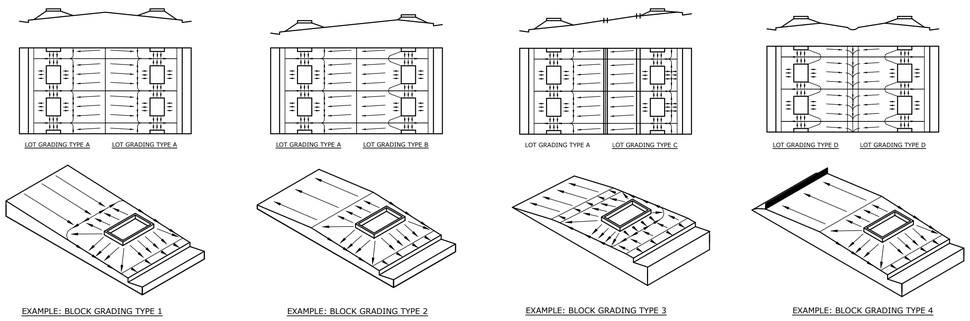

5 TYPICAL LOT GRADING DETAIL

NOT TO SCALE

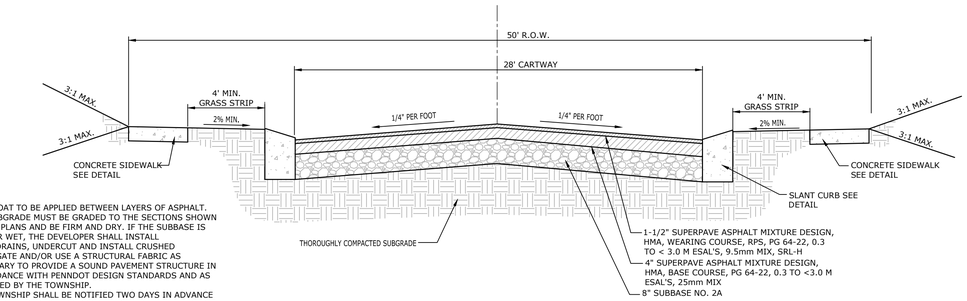

NOTE:
1. TACK COAT TO BE APPLIED BETWEEN LAYERS OF ASPHALT.
2. THE SUBGRADE MUST BE GRADED TO THE SECTIONS SHOWN ON THE PLANS AND BE FIRM AND DRY. IF THE SUBBASE IS SOFT OR WET, THE DEVELOPER SHALL INSTALL UNDERDRAINS, UNDERCUT AND INSTALL CRUSHED AGGREGATE AND/OR USE A STRUCTURAL FABRIC AS NECESSARY TO PROVIDE A SOUND PAVEMENT STRUCTURE IN ACCORDANCE WITH PENNDOT DESIGN STANDARDS AND AS APPROVED BY THE TOWNSHIP.
3. THE TOWNSHIP SHALL BE NOTIFIED TWO DAYS IN ADVANCE OF THE INTENDED DATE OF CONSTRUCTION OF THE BASE SO THAT THE SUBGRADE MAY BE INSPECTED.
4. THE TOWNSHIP SHALL BE NOTIFIED TWO DAYS IN ADVANCE OF THE INTENDED DATE OF CONSTRUCTION OF THE PAVED SURFACE SO THAT THE STONE SUBBASE MAY BE INSPECTED.
5. THE BERM OF SAID ROADWAY SHALL BE GRADED SO THAT THE NORMAL SURFACE WATER WILL BE PROPERLY CARRIED THEREIN WITHOUT ANY SURFACE WATER RUNNING ACROSS THE ROADWAY.
6. ALL ROADS AND STREETS SHALL BE CONSTRUCTED SO THAT ALL WORK AND MATERIALS CONFORM TO THE REQUIREMENTS OF PENNDOT SPECIFICATIONS, FORM 408. THE CONTRACTOR SHALL OBTAIN CONSTRUCTION MATERIALS FROM PENNDOT APPROVED SUPPLIERS AS LISTED IN PENNDOT BULLETIN 15. THE CONTRACTOR SHALL PROVIDE PENNDOT APPROVED MIX DESIGNS AND CERTIFICATESOF COMPLIANCE, FROM CS-4171, FOR ALL MATERIALS PROVIDED FOR THE WORK. DELIVERY TICKETS SHALL BE PROVIDED FOR ALL MATERIALS.

6 TYPICAL LOCAL STREET CROSS SECTION W/ SLANT CURBS

NOT TO SCALE

	SIGN	MUTCD CODE	SIZE
S	STOP	R1-1	30" X 30"
HP	HANDICAP PARKING	R7-8	12" X 18"
MPH	SPEED LIMIT	R2-1	24" X 30"
STR	STREET SIGN	D3-1	VAR. X 6"
SH	SPEED HUMP	W17-1	36" X 36"

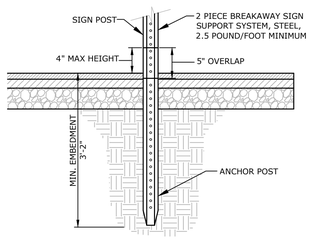

NOTES:
1. POSTS SHALL BE SQUARE BREAKAWAY POST SYSTEM CONSISTING OF A 14 GAUGE GALVANIZED STEEL SQUARE POST, 3'-6" ANCHOR AND A 12 GAUGE 2.25" TOP SECTION.
2. THE POST SHALL BE CORNER WELDED WITH 7/16" HOLES ON CENTER, ON ALL FOUR SIDES AND BASE. ONLY THE HOLES USED FOR MOUNTING SIGNS SHALL BE PUNCHED OUT. THE COATING SHALL BE HOT DIPPED GALVANIZED WITH A COATING DESIGNATION OF G-140.
3. A COMPLETE POST SYSTEM SHALL CONSIST OF AN ANCHOR SECTION OF AT LEAST 3'-6" LONG, A SQUARE TOP POST AT LEAST TEN FEET LONG, A CORNER BOLT AND A RAIN CAP.
4. ANY FREESTANDING SIGN IN A PARKING LOT SHALL BE MOUNTED AS SHOWN. PROVIDE SIGNAGE ON BOTH SIDES OF POST WHEN REQUIRED
5. ALL MATERIALS AND WORKMANSHIP SHALL BE IN ACCORDANCE WITH PUBLICATION 408 AND TC-8702B.

7 TYPICAL SIGN POST DETAIL

NOT TO SCALE

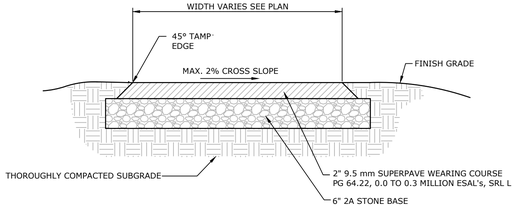

8 TYPICAL BITUMINOUS PATHWAY DETAIL

NOT TO SCALE

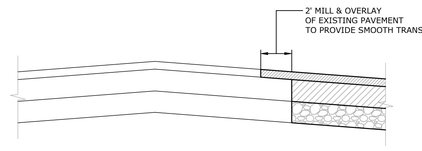

9 MILLING AND OVERLAY DETAIL

NOT TO SCALE

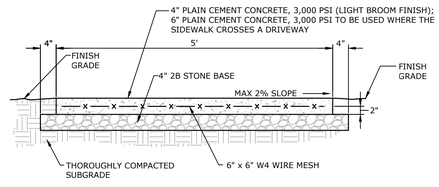

NOTES:
1. CONCRETE SHALL BE PLACED SO THAT THERE IS A SEPARATE JOINT EVERY FIVE (5) FEET WITH AN EXPANSION JOINT EVERY TWENTY (20) FEET.
2. THERE SHALL BE ONE-HALF (1/2) INCH PRE-MOLDED EXPANSION JOINTS BETWEEN EVERY FIFTH SECTION AND BETWEEN ALL POINTS WHERE CONCRETE SIDEWALK ABUTS CONCRETE CURB.

10 TYPICAL CONCRETE SIDEWALK SECTION

NOT TO SCALE

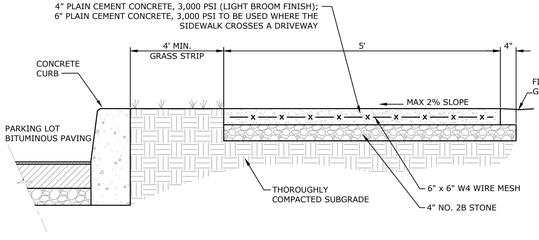

NOTES:
1. CONCRETE SHALL BE PLACED SO THAT THERE IS A SEPARATE JOINT EVERY FIVE (5) FEET WITH AN EXPANSION JOINT EVERY TWENTY (20) FEET.
2. THERE SHALL BE ONE-HALF (1/2) INCH PRE-MOLDED EXPANSION JOINTS BETWEEN EVERY FIFTH SECTION AND BETWEEN ALL POINTS WHERE CONCRETE SIDEWALK ABUTS CONCRETE CURB.

11 TYPICAL CONCRETE SIDEWALK SECTION WITH CURB

NOT TO SCALE

NOT FOR BUILDING/NOT FOR CONSTRUCTION

PLOTTED: Thursday, October 24, 2024 @ 09:10AM

FILENAME: P:\2024\2024J13-001\CADD\FINAL PH2\Plot\Z-Details.dwg XREFS: Details; Titleblock; Basin-Outlet-Structure IMAGES:

NO	BY	DATE	REVISION

SEAL

SEAL

MANAGER: CHRIS VENARCHICK
DESIGN BY: NGG
CHECKED BY: CV
DRAWN BY: NGG
CHECKED BY: CV

SCALE: N.T.S.

CLIENT
1376 CAMPUS ROAD ASSOCIATES, LLC
ONE TOWER BRIDGE
100 FRONT STREET, SUITE 560
WEST CONSHOHOCKEN, PA 19428
(571) 276-3184

PROJECT TITLE
1376 CAMPUS ROAD - PHASE 2
FINAL SUBDIVISION & LAND DEVELOPMENT PLAN
MOUNT JOY TOWNSHIP LANCASTER COUNTY, PA.

SHEET TITLE
SITE DETAILS

Land Planning
Landscape Architecture
Civil Engineering
53 West James Street
Suite 101, Lancaster, PA 17603
(717) 715-1396 FAX: (717) 435-8277
221 W. Philadelphia Street
Suite 108E, York, PA 17401
(717) 854-3805
320 N. Market Street
Suite 550W, Harrisburg, PA 17101
(717) 599-7615
E-mail: info@gsaassociates.com
www.gsaassociates.com

GSA ASSOCIATES

DATE: OCTOBER 24, 2024
PROJECT NO.: 2024J13-001

SHEET NO.: 25 OF 34

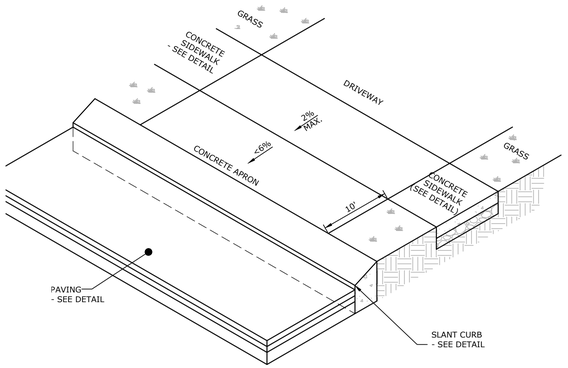

1 CONCRETE DRIVEWAY APRON

NOT TO SCALE

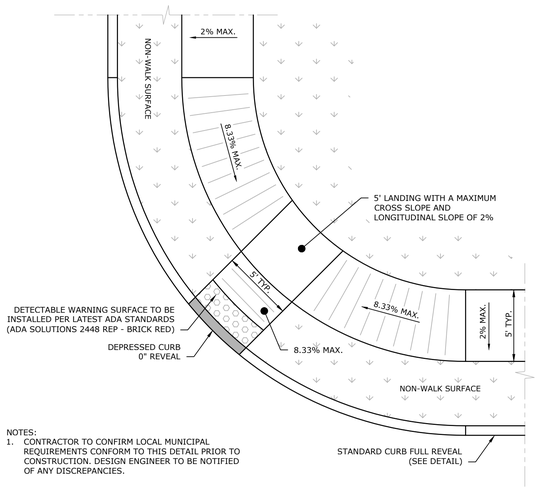

NOTES:
1. CONTRACTOR TO CONFIRM LOCAL MUNICIPAL REQUIREMENTS CONFORM TO THIS DETAIL PRIOR TO CONSTRUCTION. DESIGN ENGINEER TO BE NOTIFIED OF ANY DISCREPANCIES.

2 CURB RAMP - TYPE A

NOT TO SCALE

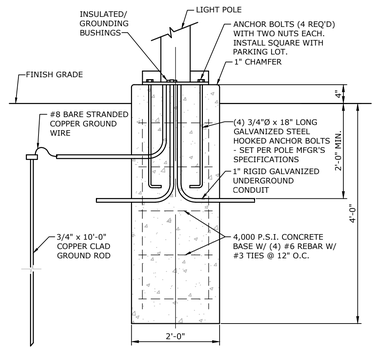

INSTALLATION IN LAWN AND LANDSCAPED AREAS

NOTES:
1. THIS LIGHT BASE DETAIL IS CONCEPTUAL AND SHALL BE CONFIRMED BY A STRUCTURAL ENGINEER/LIGHTING PROVIDER. THE CONCRETE STRENGTH, REBAR DESIGN, AND ANCHOR ALL NEED TO BE VERIFIED WITH THE LIGHTING PROVIDER PRIOR TO INSTALLATION.
2. LIGHTING SHALL BE PROVIDED IN ACCORDANCE WITH THE SALDO ORDINANCE SECTION 119-52.O.
3. SEE LIGHTING PLAN FOR DETAILED PRODUCT AND INSTALLATION INFORMATION.

3 LIGHT POST FOUNDATION DETAIL

NOT TO SCALE

NOT FOR BUILDING/NOT FOR CONSTRUCTION

NO	BY	DATE	REVISION

SEAL

SEAL

MANAGER: CHRIS VENARCHICK
DESIGN BY: NGG
CHECKED BY: CV
DRAWN BY: NGG
CHECKED BY: CV

CLIENT
1376 CAMPUS ROAD ASSOCIATES, LLC
ONE TOWER BRIDGE
100 FRONT STREET, SUITE 560
WEST CONSHOHOCKEN, PA 19428
(571) 276-3184

SCALE: N.T.S.

PROJECT TITLE
1376 CAMPUS ROAD - PHASE 2
FINAL SUBDIVISION & LAND DEVELOPMENT PLAN
MOUNT JOY TOWNSHIP LANCASTER COUNTY, PA.

SHEET TITLE
SITE DETAILS

Land Planning
Landscape Architecture
Civil Engineering
53 West James Street
Suite 101, Lancaster, PA 17603
(717) 715-1396 FAX (717) 435-8277
221 W. Philadelphia Street
Suite 108E, York, PA 17401
(717) 854-3615
320 N. Market Street
Suite 550W, Harrisburg, PA 17101
(717) 599-7615
E-mail: info@rgsassociates.com
www.rgsassociates.com
RGS ASSOCIATES

DATE: OCTOBER 24, 2024
PROJECT NO.: 2024J13-001

SHEET NO.: 26 OF 34

PLOTTED: Thursday, October 24, 2024 @ 09:10AM

FILENAME: P:\2024\2024J13-001\CADD\FINAL PH2\Plot\Z-Details.dwg XREFS: Details; Titleblock; Basin-Outlet-Structure IMAGES:

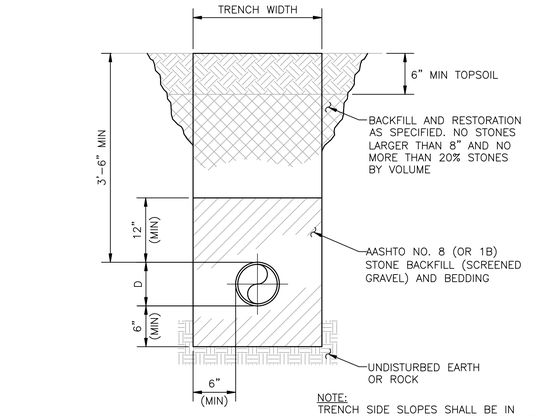

NOTE:
TRENCH SIDE SLOPES SHALL BE IN ACCORDANCE WITH OSHA REQUIREMENTS. BEGIN SIDE SLOPES, IF USED, APPROXIMATELY 18" ABOVE TOP OF PIPE (TYPICAL ALL BEDDING TYPES).

1 RIGHT-OF-WAY RESTORATION

NOT TO SCALE

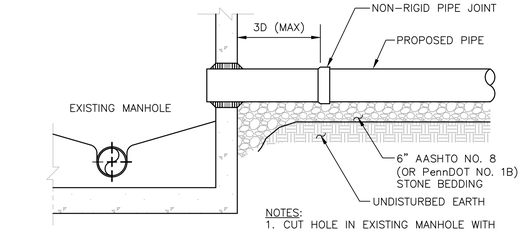

NOTES:
1. CUT HOLE IN EXISTING MANHOLE WITH CORING MACHINE.
2. INSTALL RESILIENT GASKET TYPE SEAL PER ASTM C-923.
3. CAULK ANNULAR SPACE WITH PREFORMED PLASTIC SEALING COMPOUND.

FLEXIBLE CONNECTION AT MANHOLE

2 NEW SEWER TO EXISTING MANHOLE CONNECTION

NOT TO SCALE

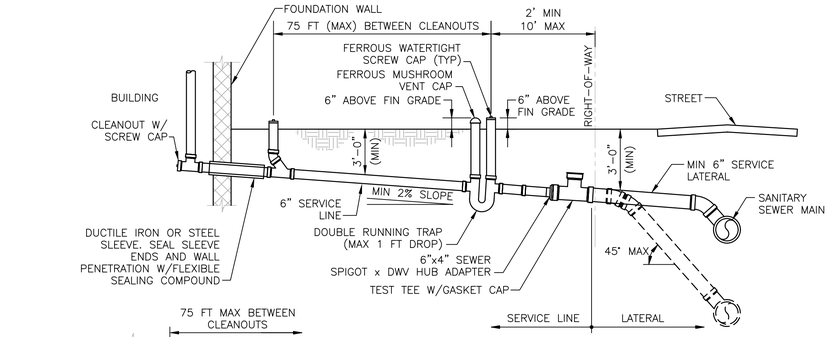

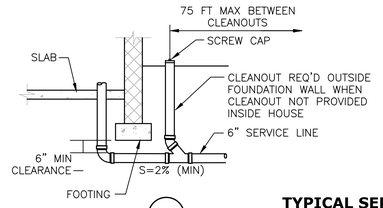

NOTE:
PROVIDE 6" OF AASHTO NO. 8 (OR PennDOT NO. 1B) STONE BELOW PIPE AND 12" ABOVE ENTIRE LENGTH OF PIPE

3 TYPICAL SERVICE LINE - PROFILE

NOT TO SCALE

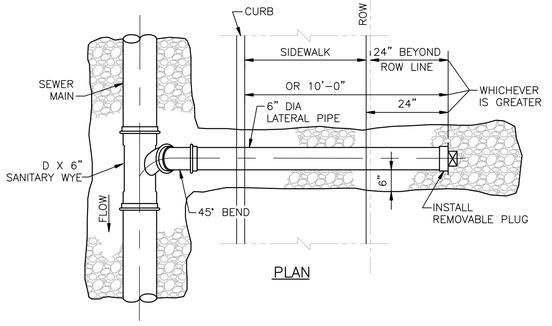

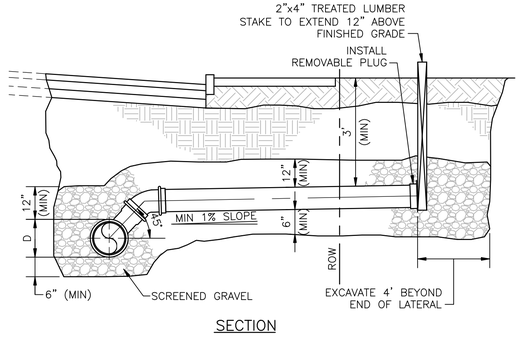

4 SEWER LATERAL

NOT TO SCALE

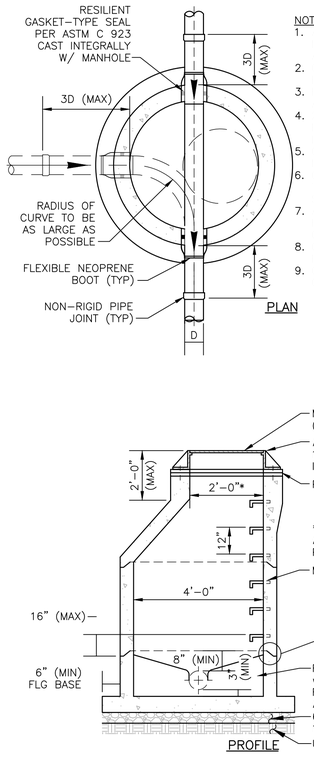

NOTES:
1. ALL PRE CAST REINFORCED CONCRETE MANHOLE SECTIONS SHALL COMPLY WITH ASTM C-478.
2. CEMENT SHALL BE TYPE II OR III, AIR ENTRAINED, WITH 4,000 psi AT 28 DAYS.
3. REINFORCEMENT SHALL BE GRADE 60 PER ASTM A-615.
4. 24" DIA. CAST IRON FRAME AND COVER PER ASTM A-48, CLASS 30, FOR H-20 LOADING.
5. CAST IRON FRAME TO BE BOLTED TO MANHOLE WITH 5/8" ANCHOR BOLTS.
6. CASTING AND GRADE RINGS TO BE SEALED TO MANHOLE WITH PREFORMED PLASTIC SEALING COMPOUND.
7. ALL JOINTS SHALL BE SEALED WITH TWO RINGS OF PREFORMED PLASTIC SEALING COMPOUND.
8. COAT MANHOLE EXTERIOR WITH DAMP PROOFING.
9. COAT MANHOLE INTERIOR WITH H2S CORROSION PROTECTION AS SPECIFIED.

5 PRECAST CONCRETE MANHOLE

NOT TO SCALE

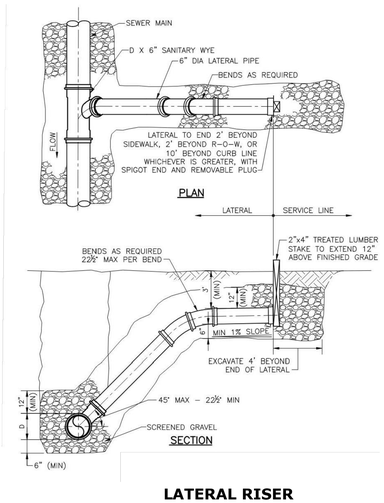

6 LATERAL RISER

NOT TO SCALE

NOTES:
1. ALL PRECAST REINFORCED CONCRETE MANHOLE SECTIONS SHALL COMPLY WITH ASTM C-478.
2. CEMENT SHALL BE TYPE II OR III, AIR ENTRAINED, WITH f'c=4,000 psi AT 28 DAYS.
3. REINFORCEMENT SHALL BE GRADE 60 PER ASTM A-615.
4. 24" DIA. CAST IRON FRAME AND COVER PER ASTM A-48, CLASS 30, FOR H-20 LOADING.
5. CAST IRON FRAME TO BE BOLTED TO MANHOLE WITH 5/8" ANCHOR BOLTS.
6. CASTING AND GRADE RINGS TO BE SEALED TO MANHOLE WITH PREFORMED PLASTIC SEALING COMPOUND.
7. ALL JOINTS SHALL BE SEALED WITH PREFORMED PLASTIC SEALING COMPOUND.
8. LINE MANHOLE INTERIOR W/T-LOCK PVC OR HDPE LINER SYSTEM.
9. ALL PIPING BETWEEN THE FORCE MAIN AND AIR RELEASE VALVE SHALL BE SCHEDULE 80 316 STAINLESS STEEL.

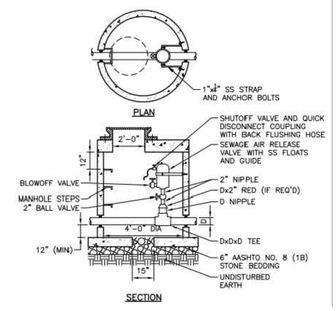

7 AIR RELEASE VALVE AND CHAMBER

NOT TO SCALE

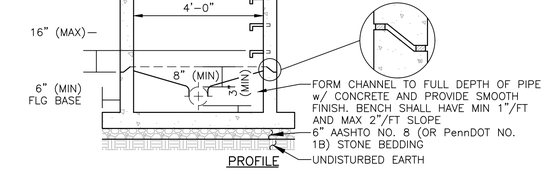

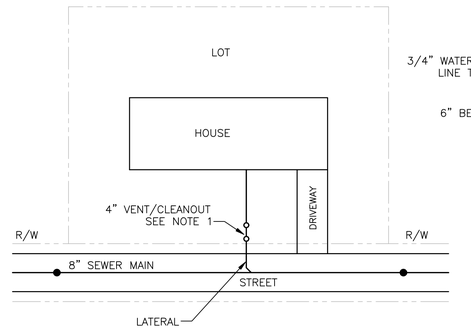

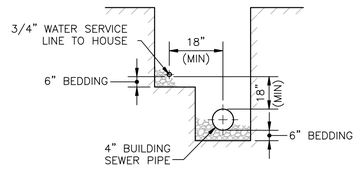

TYPICAL TRENCH FOR WATER AND SEWER PIPE

NOTES:
1. ALL VENTS AND CLEANOUTS SHALL BE LOCATED IN THE YARD AREA AND NOT IN DRIVEWAY.
2. IF SEWER LATERAL IS LOCATED UNDER DRIVEWAY, ADD FITTINGS AND PIPE AS REQUIRED TO LOCATE VENTS AND CLEANOUT IN YARD AREA.
3. VENTS AND CLEANOUTS SHALL BE A MINIMUM OF 6" ABOVE FINISHED GRADE.
4. IF 18" VERTICAL SEPARATION CANNOT BE MAINTAINED BETWEEN WATER AND SEWER SERVICES, PROVIDE 5' HORIZONTAL SEPARATION WITH WATER ABOVE SEWER.

8 TYPICAL SERVICE LINE - PLAN

NOT TO SCALE

NOT FOR BUILDING/NOT FOR CONSTRUCTION

NO	BY	DATE	REVISION

SEAL

SEAL

MANAGER: CHRIS VENARCHICK
DESIGN BY: NGG | CHECKED BY: CV
DRAWN BY: NGG | CHECKED BY: CV

CLIENT
1376 CAMPUS ROAD ASSOCIATES, LLC
ONE TOWER BRIDGE
100 FRONT STREET, SUITE 560
WEST CONSHOHOCKEN, PA 19428
(571) 276-3184

SCALE N.T.S.

PROJECT TITLE
1376 CAMPUS ROAD - PHASE 2
FINAL SUBDIVISION & LAND DEVELOPMENT PLAN
MOUNT JOY TOWNSHIP LANCASTER COUNTY, PA.

SHEET TITLE
SEWER DETAILS

Land Planning
Landscape Architecture
Civil Engineering
53 West James Street
Suite 101, Lancaster, PA 17603
(717) 715-1396 Fax: (717) 435-8277
231 W. Philadelphia Street
Suite 108E, York, PA 17401
(717) 854-3851
320 N. Market Street
Suite 550W, Harrisburg, PA 17101
(717) 599-7615
E-mail: info@rgsassociates.com
www.rgsassociates.com
RGS ASSOCIATES

DATE: OCTOBER 24, 2024
PROJECT NO.: 2024J13-001
SHEET NO.: 27 OF 34

PLOTTED: Thursday, October 24, 2024 @ 09:10AM
FILENAME: P:\2024\2024J13-001\CADD\FINAL PH2\Plot\Z-Details.dwg XREFS: Details; Titleblock; Basin-Outlet-Structure IMAGES:

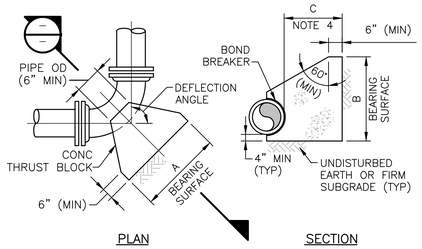

DETAIL FOR HORIZONTAL BENDS

NOMINAL PIPE SIZE (INCHES)	MAXIMUM PIPE OD (INCHES)	REQUIRED BEARING AREA (SQ FT)					
		90 DEG	60 DEG	45 DEG	30 DEG	22.50 DEG	11.25 DEG
4	4.80	2.9	2.0	1.6	1.1	0.8	0.4
8	9.05	10	7	6	4	3	1.4
12	13.20	22	15	12	8	6	3
18	19.50	48	34	26	17	13	7
20	21.60	58	41	32	21	16	8
24	25.80	83	59	45	30	23	12

THRUST BLOCKS FOR HORIZONTAL BENDS AND LOWER VERTICAL BENDS

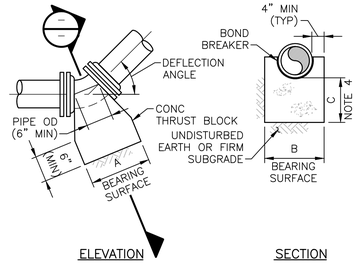

DETAIL FOR LOWER VERTICAL BENDS

NOTES:

1. MAXIMUM TEST PRESURE = 1.5 x 150 PSI
2. MINIMUM ALLOWABLE SOIL BEARING PRESSURE = 2000 PSF
3. BEARING AREA = A x B
4. C SHALL BE GREATER THAN A/2 AND B/2.

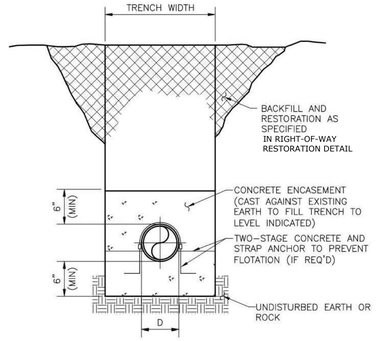

NOTE:
TRENCH SIDE SLOPES SHALL BE IN ACCORDANCE WITH OSHA REQUIREMENTS. BEGIN SIDE SLOPES, IF USED, APPROXIMATELY 18" ABOVE TOP OF PIPE (TYPICAL ALL BEDDING TYPES).

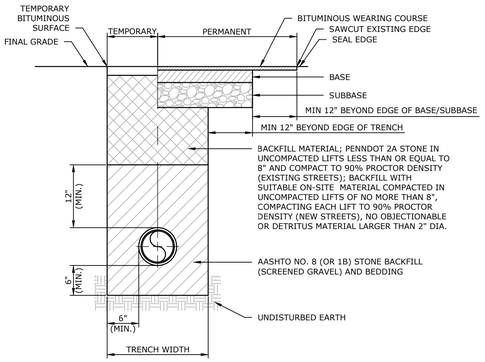

NOTES:
1. BACKFILL & PAVEMENT RESTORATION IN STATE ROADS SHALL BE AS SPECIFIED BY PENNDOT.
2. BACKFILL & PAVEMENT RESTORATION IN TOWNSHIP ROADS, ACCESS DRIVES, PARKING AREAS AND LOADING AREAS SHALL BE AS SPECIFIED IN THE GOVERNING MUNICIPAL SUBDIVISION AND LAND DEVELOPMENT ORDINANCE.
3. SEE PAVING CROSS-SECTION DETAILS FOR SPECIFIC PAVEMENT MATERIALS AND DEPTHS.

1 THRUST BLOCKS FOR HORIZONTAL BENDS AND LOWER VERTICAL BENDS

NOT TO SCALE

MINIMUM RESTRAINED PIPE LENGTH (FT) FOR VERTICAL BENDS (WITHOUT POLYETHLENE ENCASEMENT)			
DIAMETER (IN)	VERTICAL BEND ANGLE (DEGREES)		
	45	22½	11¼
6	20	10	5
8	26	12	6
10	32	15	8
12	37	18	9
14	43	21	10
16	48	23	12
18	54	26	13
20	59	28	14
24	70	34	17

MINIMUM RESTRAINED PIPE LENGTH (FT) FOR HORIZONTAL BENDS (WITHOUT POLYETHLENE ENCASEMENT)				
DIAMETER (IN)	HORIZONTAL BEND ANGLE (DEGREES)			
	90	45	22½	11¼
6	15	6	3	1
8	19	8	4	2
10	23	10	5	2
12	28	11	5	3
14	32	13	6	3
16	36	15	7	4
18	40	16	8	4
20	43	18	9	4
24	51	21	10	5

MINIMUM RESTRAINED PIPE LENGTH (FT) FOR VERTICAL BENDS (WITH POLYETHLENE ENCASEMENT)			
DIAMETER (IN)	VERTICAL BEND ANGLE (DEGREES)		
	45	22½	11¼
6	29	14	7
8	37	18	9
10	45	22	11
12	53	26	13
14	61	29	15
16	69	33	16
18	77	37	18
20	85	41	20
24	100	48	24

MINIMUM RESTRAINED PIPE LENGTH (FT) FOR HORIZONTAL BENDS (WITH POLYETHLENE ENCASEMENT)				
DIAMETER (IN)	HORIZONTAL BEND ANGLE (DEGREES)			
	90	45	22½	11¼
6	16	7	3	2
8	21	9	4	2
10	26	11	5	3
12	30	13	6	3
14	35	14	7	3
16	39	16	8	4
18	44	18	9	4
20	48	20	9	5
24	56	23	11	6

NOTES:
1 DESIGN PRESSURE = 150 PSI
2 DEPTH OF COVER = 4 FEET
3 SAFETY FACTOR = 1.5
4 SOIL TYPE = COHESIVE GANGULAR
5 SOIL INTERNAL FRICTION ANGLE = 20 DEGREES
6 SOIL COHESION = 200 PSF
7 SOIL DENSITY = 90 PCF

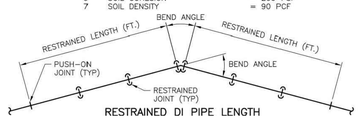

RESTRAINED DI PIPE LENGTH

4 RESTRAINED DI PIPE LENGTH

NOT TO SCALE

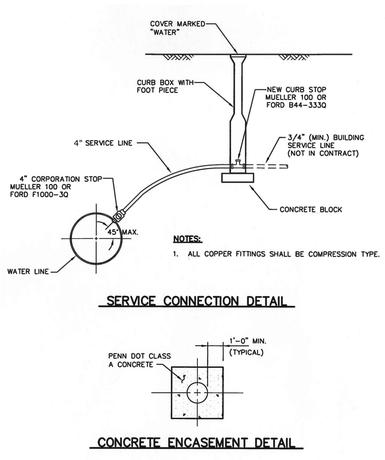

NOTES:
1. ALL COPPER FITTINGS SHALL BE COMPRESSION TYPE.

SERVICE CONNECTION DETAIL

CONCRETE ENCASEMENT DETAIL

5 SERVICE CONNECTION AND CONCRETE ENCASEMENT

NOT TO SCALE

2 CONCRETE ENCASEMENT

NOT TO SCALE

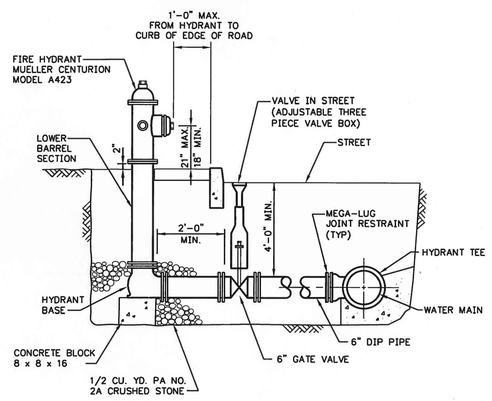

6 FIRE HYDRANT

NOT TO SCALE

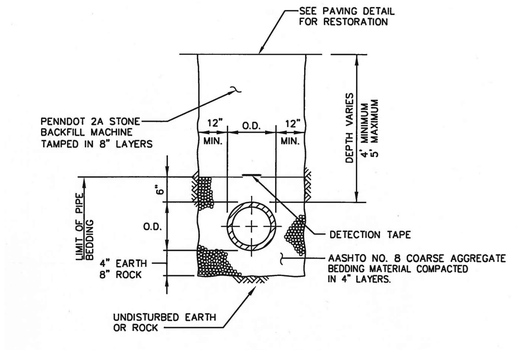

7 WATERLINE TRENCH - PAVED AREAS

NOT TO SCALE

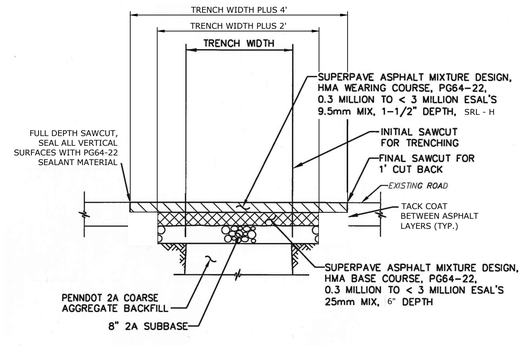

8 PAVING RESTORATION

NOT TO SCALE

NOT FOR BUILDING/NOT FOR CONSTRUCTION

SEAL

SEAL

NO	BY	DATE	REVISION

MANAGER: CHRIS VENARCHICK
DESIGN BY: NGG | CHECKED BY: CV
DRAWN BY: NGG | CHECKED BY: CV
SCALE: N.T.S.

CLIENT
1376 CAMPUS ROAD ASSOCIATES, LLC
ONE TOWER BRIDGE
100 FRONT STREET, SUITE 560
WEST CONSHOHOCKEN, PA 19428
(571) 276-3184

PROJECT TITLE
1376 CAMPUS ROAD - PHASE 2
FINAL SUBDIVISION & LAND DEVELOPMENT PLAN
MOUNT JOY TOWNSHIP LANCASTER COUNTY, PA.

SHEET TITLE
SEWER & WATER DETAILS

Land Planning
Landscape Architecture
Civil Engineering
53 West James Street, Suite 101, Lancaster, PA 17603, (717) 715-1396 Fax: (717) 435-8277
221 W. Philadelphia Street, Suite 108E, York, PA 17401, (717) 854-3855
320 N. Market Street, Suite 550W, Harrisburg, PA 17101, (717) 599-7615
E-mail: info@rgsassociates.com
www.rgsassociates.com

RGS ASSOCIATES

DATE: OCTOBER 24, 2024
PROJECT NO.: 2024J13-001
SHEET NO.: 28 OF 34

PLOTTED: Thursday, October 24, 2024 @ 09:10AM
FILENAME: P:\2024\2024J13-001\CADD\FINAL PH2\Plot\Z-Details.dwg XREFS: Details; Titleblock; Basin-Outlet-Structure IMAGES:

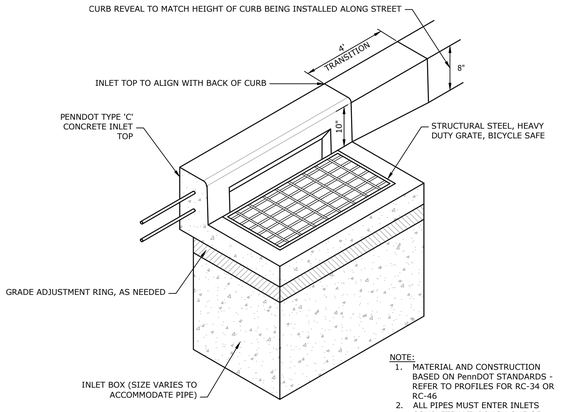

NOTE:
1. MATERIAL AND CONSTRUCTION BASED ON PennDOT STANDARDS - REFER TO PROFILES FOR RC-34 OR RC-46
2. ALL PIPES MUST ENTER INLETS COMPLETELY THROUGH ONE OF THE SIDES. NO CORNER ENTRY OF PIPES IS PERMITTED.

1 TYPE "C" INLET DETAIL

NOT TO SCALE

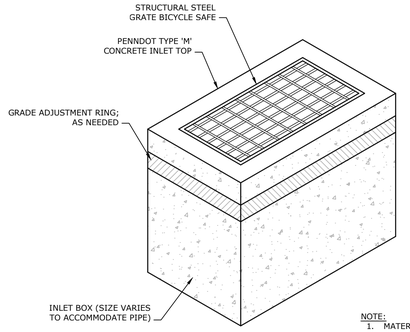

NOTE:
1. MATERIAL AND CONSTRUCTION BASED ON PennDOT STANDARDS - REFER TO PROFILES FOR RC-34 OR RC-46
2. ALL PIPES MUST ENTER INLETS COMPLETELY THROUGH ONE OF THE SIDES. NO CORNER ENTRY OF PIPES IS PERMITTED.

2 TYPE "M" INLET DETAIL

NOT TO SCALE

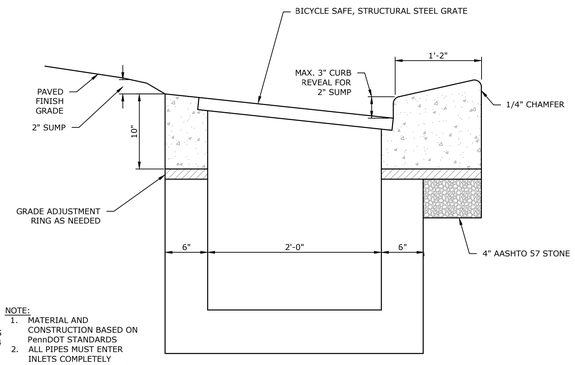

NOTE:
1. MATERIAL AND CONSTRUCTION BASED ON PennDOT STANDARDS
2. ALL PIPES MUST ENTER INLETS COMPLETELY THROUGH ONE OF THE SIDES. NO CORNER ENTRY OF PIPES IS PERMITTED.

3 CONCRETE INLET TOP SLANT CURB

NOT TO SCALE

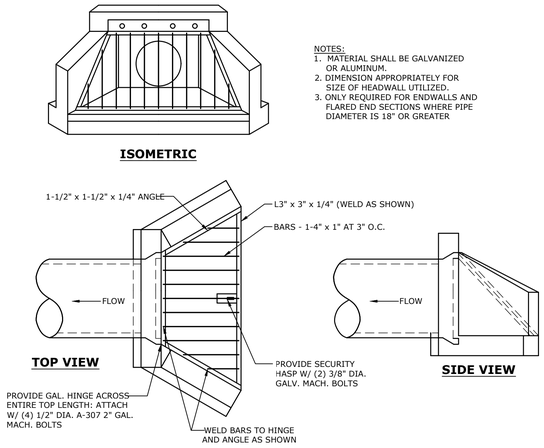

NOTES:
1. MATERIAL SHALL BE GALVANIZED OR ALUMINUM.
2. DIMENSION APPROPRIATELY FOR SIZE OF HEADWALL UTILIZED.
3. ONLY REQUIRED FOR ENDWALLS AND FLARED END SECTIONS WHERE PIPE DIAMETER IS 18" OR GREATER

4 TRASH RACK DETAIL

NOT TO SCALE

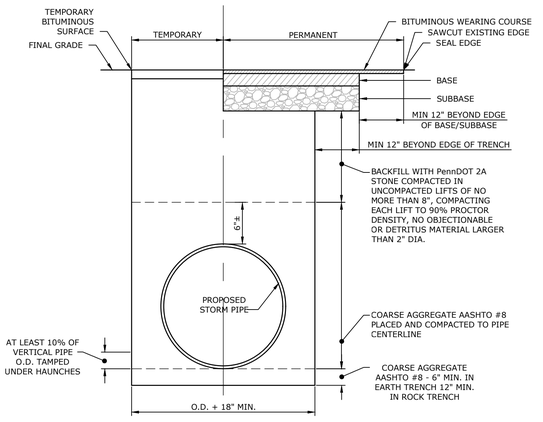

5 STORM SEWER PIPE BEDDING AND TRENCH BACKFILL DETAIL IN EXISTING PAVEMENT

NOT TO SCALE

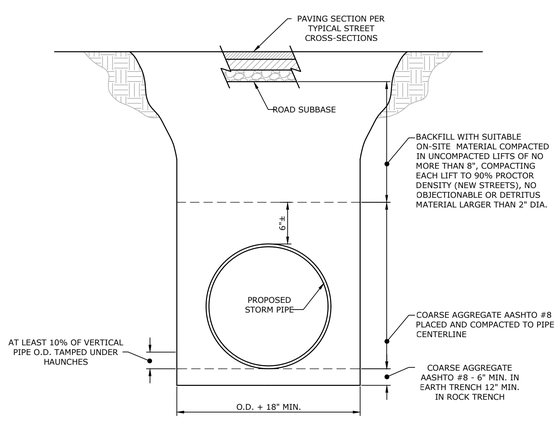

6 STORM SEWER PIPE BEDDING AND TRENCH BACKFILL DETAIL

NOT TO SCALE

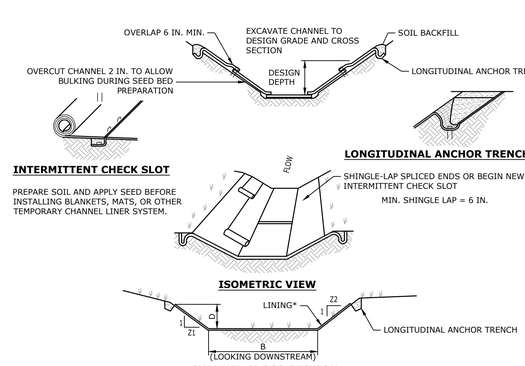

* SEE MANUFACTURER'S LINING INSTALLATION DETAIL FOR STAPLE PATTERNS, VEGETATIVE STABILIZATION FOR SOIL AMENDMENTS, SEED MIXTURES AND MULCHING INFORMATION

STANDARD CONSTRUCTION DETAIL # 6-1 - VEGETATED CHANNEL							
CHANNEL NO.	STATIONS	BOTTOM WIDTH B (FT)	DEPTH D (FT)	TOP WIDTH W (FT)	Z1 (FT)	Z2 (FT)	LINING *
5A	ALL	1.5	1.5	13.5	4	4	ECP-2
5B	ALL	1.5	1	9.5	4	4	NAG S75
6	ALL	1.5	1.5	13.5	4	4	NAG S75
7A	ALL	2	1	10	4	4	ECP-2
7B	ALL	2	1.5	14	4	4	ECP-2
8	ALL	2	1	10	4	4	ECP-2
9	ALL	2	2	18	4	4	ECP-2

NOTES:
1. ANCHOR TRENCHES SHALL BE INSTALLED AT BEGINNING AND END OF CHANNEL IN THE SAME MANNER AS LONGITUDINAL ANCHOR TRENCHES.
2. CHANNEL DIMENSIONS SHALL BE CONSTANTLY MAINTAINED. CHANNEL SHALL BE CLEANED WHENEVER TOTAL CHANNEL DEPTH IS REDUCED BY 25% AT ANY LOCATION.
   SEDIMENT DEPOSITS SHALL BE REMOVED WITHIN 24 HOURS OF DISCOVERY OR AS SOON AS SOIL CONDITIONS PERMIT ACCESS TO CHANNEL WITHOUT FURTHER DAMAGE. DAMAGED LINING SHALL BE REPAIRED OR REPLACED WITHIN 48 HOURS OF DISCOVERY.
3. NO MORE THAN ONE THIRD OF THE SHOOT (GRASS LEAF) SHALL BE REMOVED IN ANY MOWING. GRASS HEIGHT SHALL BE MAINTAINED BETWEEN 2 AND 3 INCHES UNLESS OTHERWISE SPECIFIED. EXCESS VEGETATION SHALL BE REMOVED FROM PERMANENT CHANNELS TO ENSURE SUFFICIENT CHANNEL CAPACITY.

7 STANDARD CONSTRUCTION DETAIL #6-1 VEGETATED CHANNEL

NOT TO SCALE

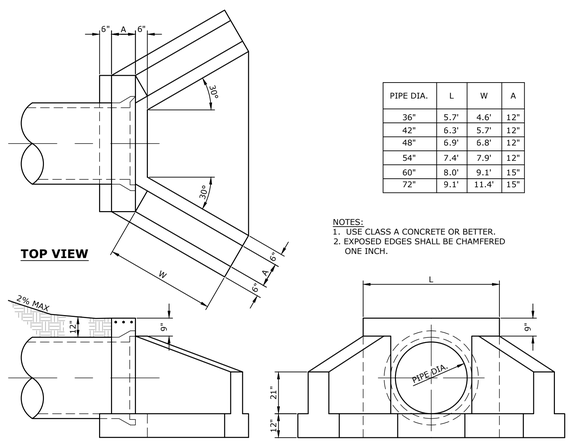

PIPE DIA.	L	W	A
36"	5.7'	4.6'	12"
42"	6.3'	5.7'	12"
48"	6.9'	6.8'	12"
54"	7.4'	7.9'	12"
60"	8.0'	9.1'	15"
72"	9.1'	11.4'	15"

NOTES:
1. USE CLASS A CONCRETE OR BETTER.
2. EXPOSED EDGES SHALL BE CHAMFERED ONE INCH.

8 TYPE D-W ENDWALL DETAIL

NOT TO SCALE

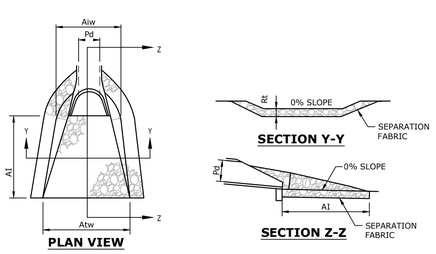

NOTES:
1. ALL APRONS SHALL BE CONSTRUCTED TO THE DIMENSIONS SHOWN. TERMINAL WIDTHS SHALL BE ADJUSTED AS NECESSARY TO MATCH RECEIVING CHANNELS.
2. ALL APRONS SHALL BE INSPECTED AT LEAST WEEKLY AND AFTER EACH RUNOFF EVENT. DISPLACED RIPRAP WITHIN THE APRON SHALL BE REPLACED IMMEDIATELY.

BMP NO.	OUTLET NO.	PIPE DIA Pd (IN)	RIPRAP SIZE R-_	RIPRAP THICK. Rt (IN)	APRON LENGTH AI (FT)	APRON INITIAL WIDTH Aiw (FT)	APRON TERMINAL WIDTH Atw (FT)
9	D50	15	3	9	6	3.75	6.15
9	D96	30	3	9	12	7.5	12.3

9 STANDARD CONSTRUCTION DETAIL #9-1 RIPRAP APRON AT PIPE OUTLET WITH FLARED END SECTION OR ENDWALL

NOT TO SCALE

NOT FOR BUILDING/NOT FOR CONSTRUCTION

NO	BY	DATE	REVISION

SEAL

SEAL

MANAGER: CHRIS VENARCHICK
DESIGN BY: OLH | CHECKED BY: CV
DRAWN BY: OLH | CHECKED BY: CV

CLIENT
1376 CAMPUS ROAD ASSOCIATES, LLC
ONE TOWER BRIDGE
100 FRONT STREET, SUITE 560
WEST CONSHOHOCKEN, PA 19428
(571) 276-3184

SCALE: N.T.S.

PROJECT TITLE
1376 CAMPUS ROAD - PHASE 2
FINAL SUBDIVISION & LAND DEVELOPMENT PLAN
MOUNT JOY TOWNSHIP | LANCASTER COUNTY, PA.

SHEET TITLE
STORMWATER DETAILS

Land Planning
Landscape Architecture
Civil Engineering
53 West James Street
Suite 101, Lancaster, PA 17603
(717) 715-1396 FAX (717) 435-8277
221 W. Philadelphia Street
Suite 108E, York, PA 17401
(717) 854-4455
321 N. Market Street
Suite 550W, Harrisburg, PA 17101
(717) 525-1396
E-mail: info@rgsassociates.com
www.rgsassociates.com
RGS ASSOCIATES

DATE: OCTOBER 24, 2024
PROJECT NO.: 2024J13-001
SHEET NO.: 29 OF 34

PLOTTED: Thursday, October 24, 2024 @ 09:10AM
FILENAME: P:\2024\2024J13-001\CADD\FINAL PH2\Plot\Z-Details.dwg XREFS: Details; Titleblock; Basin-Outlet-Structure IMAGES:

OPTION 1 - COMPOST FILTER SOCK

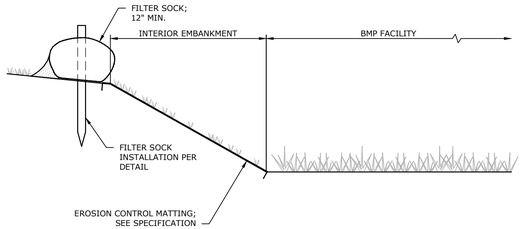

OPTION 2 - STRAW BALES

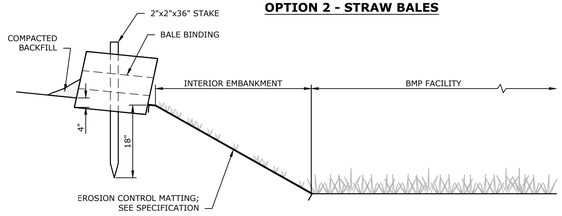

OPTION 3 - SOD

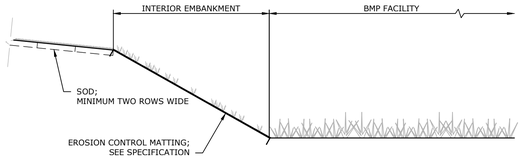

NOTES:

1. DURING FACILITY INSTALLATION OR CONVERSION, THE CONTRACTOR SHALL IMPLEMENT AT LEAST ONE, OR A COMBINATION OF THE SPECIFIED PROTECTION OPTIONS IN ORDER TO ENSURE THAT THE FACILITY IS SUFFICIENTLY PROTECTED FOLLOWING PLACEMENT OF THE SOIL MEDIA, VEGETATION, OUTLET CONTROL STRUCTURE, OR SIMILAR.
2. FILTER SOCK INSTALLATION SHALL FOLLOW THE INSTALLATION PROCEDURES IDENTIFIED IN THE COMPOST FILTER SOCK DETAIL.
3. STRAW BALE INSTALLATION SHALL BE IN ACCORDANCE WITH THE RECOMMENDATIONS CONTAINED WITHIN THE PA EROSION AND SEDIMENTATION CONTROL MANUAL.
4. ALL SOD SHALL BE HEALTHY AND VIGOROUS UPON ARRIVAL TO THE SITE. ALL NECESSARY IRRIGATION OF THE SOD FOLLOWING PLACEMENT SHALL BE THE RESPONSIBILITY OF THE CONTRACTOR. ALL PORTIONS OF SOD WHICH FAIL TO ESTABLISH AND SUSTAIN GROWTH SHALL BE REMOVED AND REPLACED IMMEDIATELY.
5. BMP PROTECTION SHALL BE MAINTAINED UNTIL THE UPLAND DRAINAGE AREA TRIBUTARY TO THE BMP ACHIEVES A UNIFORM VEGETATIVE COVER OF AT LEAST 70%.

1 TYPICAL BMP PROTECTION DETAIL

NOT TO SCALE

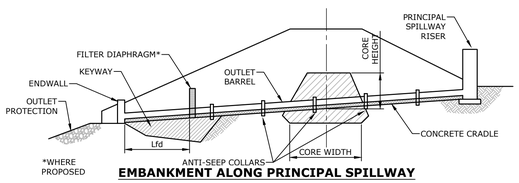

EMBANKMENT ALONG PRINCIPAL SPILLWAY

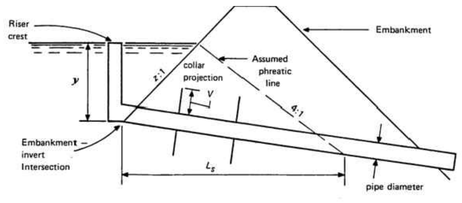

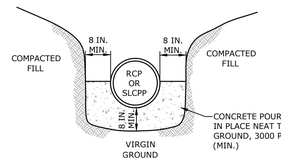

CROSS-SECTION AT OUTLET BARREL

NOTES:

1. A CONCRETE CRADLE MAY BE USED IN CONJUNCTION WITH ANTI-SEEP COLLARS AND/OR FILTER DIAPHRAGM.
2. ANTI-SEEP COLLAR NUMBER, SIZE AND SPACING SHALL BE AS SHOWN ELSEWHERE IN PLAN.
3. FILTER DIAPHRAGM LOCATION (Lfd) SHALL BE AS SHOWN IN FIGURE 7.8 OF THE PA DEP EROSION CONTROL MANUAL.

DIAMETER (IN.)	SIDE (IN.)	TOTAL BOTTOM (IN.)	BELOW PIPE (IN.)
12	8.00	32.00	8.00
15	8.00	35.56	8.00
18	8.00	39.04	8.00
21	8.00	42.52	8.00
24	8.00	46.00	8.00
27	8.25	49.98	8.00
30	8.50	53.96	8.00
33	8.75	58.18	8.25
36	9.00	62.16	9.00
42	9.50	69.88	10.50
48	10.00	77.84	12.00
54	10.50	86.04	13.50
60	11.00	94.00	15.00

3 CONCRETE CRADLE FOR BASIN OR TRAP OUTLET BARREL

NOT TO SCALE

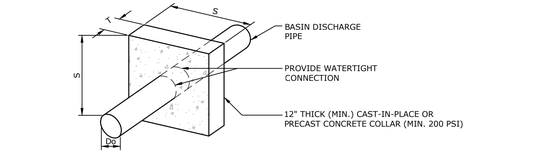

BASIN NO.	TEMP OR PERM	Y (FT)	Z	Ls (FT)	Lf (FT)	V (IN)	BARREL DIA (IN)	COLLAR SIZE (IN)	NO. COLLARS	COLLAR SPACING (FT)	DISTANCE TO 1ST COLLAR (FT)
9 (OS-D21)	P	7.0	3	50.00	57.50	24	24	72	2	15	5

NOTES:

1. MIN. CONCRETE COMPRESSIVE STRENGTH = 3,000 PSI
2. ALL COLLARS SHALL BE INSTALLED SO AS TO BE WATERTIGHT
3. COLLARS SHOULD NOT BE LOCATED CLOSER THAN 2 FEET TO A PIPE JOINT
4. SEE BASIN EMBANKMENT DETAIL FOR LOCATION

4 REINFORCED CONCRETE ANTI-SEEP COLLAR

NOT TO SCALE

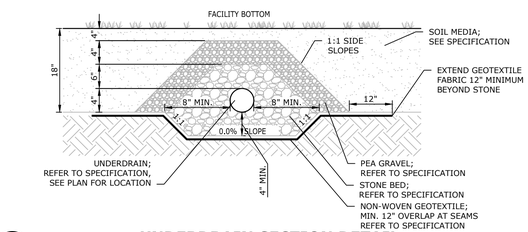

8 UNDERDRAIN SECTION DETAIL

NOT TO SCALE

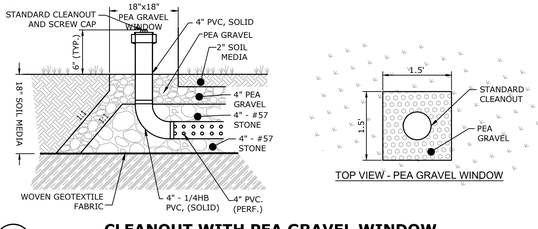

TOP VIEW - PEA GRAVEL WINDOW

9 CLEANOUT WITH PEA GRAVEL WINDOW

NOT TO SCALE

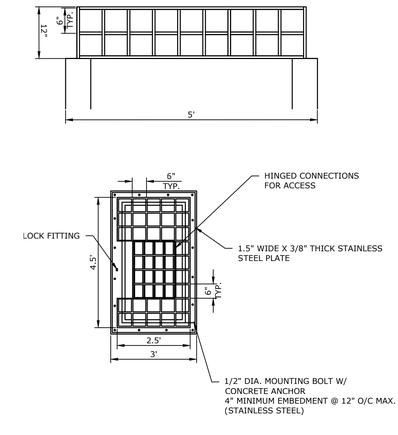

10 2' x 4' OUTLET STRUCTURE TRASH RACK DETAIL

NOT TO SCALE

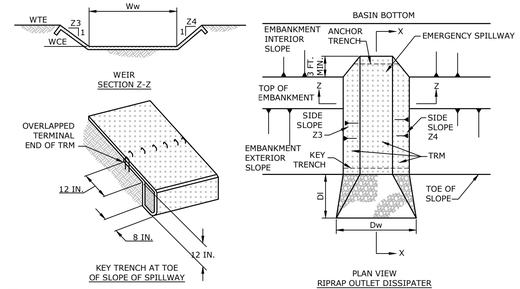

STANDARD CONSTRUCTION DETAIL #7-13													
BASIN NO.	WEIR					LINING		CHANNEL		DISSIPATER			
	Z3 (FT)	Z4 (FT)	TOP ELEV WTE (FT)	CREST ELEV WCE (FT)	WIDTH Ww (FT)	TRM TYPE	STAPLE PTRN	Z5 (FT)	DEPTH Cd (FT)	LENGTH DI (FT)	WIDTH Dw (FT)	RIPRAP SIZE (R-_)	RIPRAP THICK. DRt (IN)
9	3	3	503	501.5	50	NAG P300	3.5	3	1	8	50	3	9

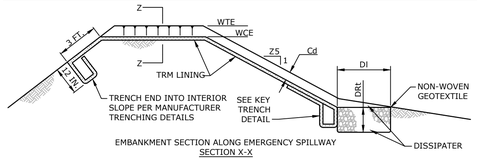

EMBANKMENT SECTION ALONG EMERGENCY SPILLWAY
SECTION X-X

NOTES:

1. HEAVY EQUIPMENT SHALL NOT CROSS OVER SPILLWAY WITHOUT PRECAUTIONS TAKEN TO PROTECT TRM LINING.
2. DISPLACED LINER WITHIN THE SPILLWAY AND/OR OUTLET CHANNEL SHALL BE REPLACED IMMEDIATELY.
3. RIPRAP AT TOE OF EMBANKMENT SHALL BE EXTENDED A SUFFICIENT LENGTH IN BOTH DIRECTIONS TO PREVENT SCOUR.
4. THE USE OF BAFFLES THAT REQUIRE SUPPORT POSTS ARE RESTRICTED FROM USE IN BASINS REQUIRING IMPERVIOUS LINERS.

2 STANDARD CONSTRUCTION DETAIL #7-13 SEDIMENT BASIN EMERGENCY SPILLWAY WITH TRM LINING DETAIL

NOT TO SCALE

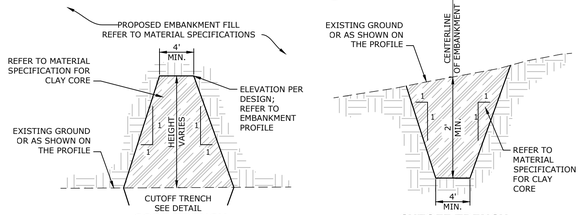

5 CORE TRENCH & CUTOFF TRENCH DETAIL

NOT TO SCALE

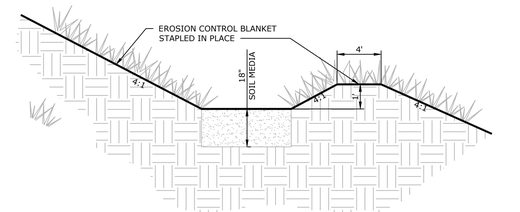

6 STORMWATER MANAGEMENT FACILITY FOREBAY SECTION DETAIL

NOT TO SCALE

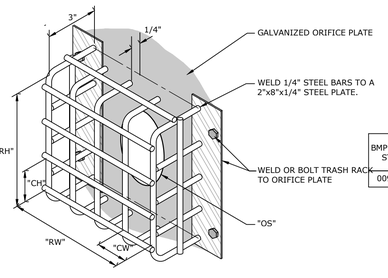

BMP NO./OUTLET STRUCTURE	ORIFICE DIAMETER "OS"	CAGE SPACING		RACK DIMENSIONS	
		WIDTH "CW"	HEIGHT "CH"	WIDTH "RW"	HEIGHT "RH"
009 / OS-D21	6" Ø	6"	6"	18"	18"

7 BIO-RETENTION FACILITY STANDARD DETAIL

NOT TO SCALE

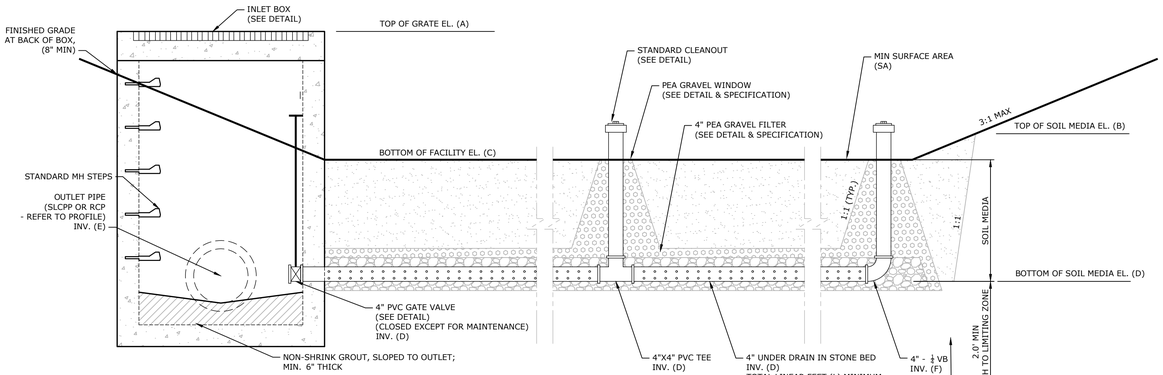

BIO-RETENTION FACILITY							
FACILITY ID	ELEV (A)	ELEV (B)	ELEV (C)	ELEV (D)	ELEV (E)	LENGTH (L)	AREA (SA)
BMP-009	501	498.00	496.25	494.50	494.00	SEE PLAN	13377

11 BIO-RETENTION FACILITY STANDARD DETAIL

NOT TO SCALE

NOT FOR BUILDING/NOT FOR CONSTRUCTION

NO	BY	DATE	REVISION

SEAL

SEAL

MANAGER: CHRIS VENARCHICK
DESIGN BY: OLH | CHECKED BY: CV
DRAWN BY: OLH | CHECKED BY: CV

SCALE: N.T.S.

CLIENT
1376 CAMPUS ROAD ASSOCIATES, LLC
ONE TOWER BRIDGE
100 FRONT STREET, SUITE 560
WEST CONSHOHOCKEN, PA 19428
(571) 276-3184

PROJECT TITLE
1376 CAMPUS ROAD - PHASE 2
FINAL SUBDIVISION &
LAND DEVELOPMENT PLAN
MOUNT JOY TOWNSHIP LANCASTER COUNTY, PA.

SHEET TITLE
STORMWATER DETAILS

Land Planning
Landscape Architecture
Civil Engineering
53 West James Street
Suite 101, Lancaster, PA 17603
(717) 715-1396 FAX: (717) 435-8277
221 W. Philadelphia Street
Suite 108E, York, PA 17401
(717) 854-3805
320 N. Market Street
Suite 550W, Harrisburg, PA 17101
(717) 599-7615
E-mail: info@cpgassociates.com
www.cpgassociates.com
CPG ASSOCIATES

DATE: OCTOBER 24, 2024
PROJECT NO.: 2024J13-001

SHEET NO.: 30 OF 34

PLOTTED: Thursday, October 24, 2024 @ 09:10AM

FILENAME: P:\2024\2024J13-001\CADD\FINAL PH2\Plot\Z-Details.dwg XREFS: Details; Titleblock; Basin-Outlet-Structure IMAGES:

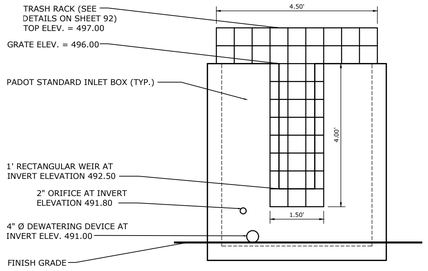

1 BASIN OUTLET STRUCTURE

NOT TO SCALE

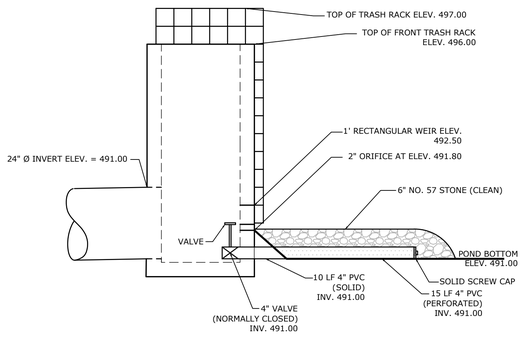

2 DEWATERING DEVICE DETAIL

NOT TO SCALE

NOT FOR BUILDING/NOT FOR CONSTRUCTION

NO	BY	DATE	REVISION

SEAL

SEAL

MANAGER: CHRIS VENARCHICK

DESIGN BY: OLH | CHECKED BY: CV

DRAWN BY: OLH | CHECKED BY: CV

CLIENT
1376 CAMPUS ROAD ASSOCIATES, LLC
ONE TOWER BRIDGE
100 FRONT STREET, SUITE 560
WEST CONSHOHOCKEN, PA 19428
(571) 276-3184

SCALE N.T.S.

PROJECT TITLE
1376 CAMPUS ROAD - PHASE 2
FINAL SUBDIVISION & LAND DEVELOPMENT PLAN
MOUNT JOY TOWNSHIP LANCASTER COUNTY, PA.

SHEET TITLE
STORMWATER DETAILS

Land Planning
Landscape Architecture
Civil Engineering
53 West James Street
Suite 101, Lancaster, PA 17603
(717) 715-1396 FAX (717) 435-8277
221 W. Philadelphia Street
Suite 108E, York, PA 17401
(717) 854-3855
320 N. Market Street
Suite 550W, Harrisburg, PA 17101
(717) 599-7615
E-mail: info@rgsassociates.com
www.rgsassociates.com

RGS ASSOCIATES

DATE: OCTOBER 24, 2024

PROJECT NO.: 2024J13-001

SHEET NO.: 31 OF 34

PLOTTED: Thursday, October 24, 2024 @ 09:10AM

FILENAME: P:\2024\2024J13-001\CADD\FINAL PH2\Plot\Z-Details.dwg XREFS: Details; Titleblock; Basin-Outlet-Structure IMAGES:

MATERIAL SPECIFICATIONS

MATERIAL	PLAN DESIGNATION	SPECIFICATION / TEST METHOD	SIZE	NOTES
STORMWATER CONVEYANCE				
WATER TIGHT (WT) STORM DRAIN	SLCPP	AASHTO M252, TYPE S (4- THROUGH 10-INCH) AASHTO M294, TYPE S (12- THROUGH 60-INCH) ASTM F2306	REFER TO PROFILE	
CONCRETE STORM DRAIN	RCP	ASTM C76 (CLASS III) ASTM C443 (JOINTS AND GASKETS)	REFER TO PROFILE	GRAVITY STORM DRAIN PIPING
ROOF LEADER	SDR-35 OR HDPEP	SDR-35 (PS46) - ASTM D3034 (4"-15") (PRODUCT STANDARD) - ASTM F477 (GASKET) - ASTM D3212 (INTEGRAL BELL JOINT) HDPEP - ASTM F758 (TYPE PS 28) - AASHTO M252-S, OR - AASHTO M294-S	REFER TO PLAN	
STORMWATER MANAGEMENT				
EROSION CONTROL BLANKET	ECB	REFER TO THE MATERIAL AND PERFORMANCE SPECIFICATIONS INCLUDED ON THE PLAN.		COCONUT MATTING, ECS-1B, NAG S75, OR EQUIVALENT
CLAY CORE		SOIL CLASSIFIED AS GC, SC, CH, OR CL, PER THE UNIFIED SOIL CLASSIFICATION SYSTEM, WITH AT LEAST 30% PASSING THE 200 SIEVE. DENSITY SHALL NOT BE LESS THAN 95% OF MAXIMUM DRY DENSITY (ASTM D-698) WITH A MOISTURE CONTENT WITHIN 2% +/- OF THE OPTIMUM. ALL COMPACTION IS TO BE DETERMINED BY AASHTO METHOD T-99 (STANDARD PROCTOR), UNLESS OTHERWISE APPROVED BY THE GEOTECHNICAL ENGINEER	REFER TO EMBANKMENT PROFILES AND/OR CROSS-SECTIONS	FOR MORE INFORMATION, REFER TO SECTION B. OF THE "STORMWATER MANAGEMENT CONSTRUCTION SPECIFICATIONS" FOR EARTH FILL MATERIAL.
NON-WOVEN GEOTEXTILE FABRIC		ASTM D-4632 (TENSILE STRENGTH, 100 LBS) ASTM D-4632 (ELONGATION 50% MIN.) ASTM D-6241 (PUNCTURE, 250 LBS) ASTM D-4533 (TRAPEZOID TEAR STRENGTH, 45 LBS) ASTM D-4751 (AOS SIEVE NO. 70) ASTM D-4491 (PERMITTIVITY 1.7 SEC^{-1} MIN.) ASTM D-4355 (ULTRAVIOLET RESISTANCE 70% @ 500 HRS) ASTM D-4491 (WATER FLOW RATE 120 GPM/SF)		MIRAFI 140N, GEOTEX 451, OR EQUIVALENT
WOVEN GEOTEXTILE FABRIC		ASTM D-4632 (TENSILE STRENGTH, 365 LBS) ASTM D-4632 (ELONGATION 24% MIN) ASTM D-4533 (TRAPEZOID TEAR STRENGTH, 115 LBS) ASTM D-6241 (PUNCTURE 675 LBS) ASTM D-4491 (PERMITTIVITY 2.1 SEC^{-1}) ASTM D-4751 (AOS SIEVE NO. 40) ASTM D-4355 (ULTRAVIOLET RESISTANCE 90% @ 500 HRS) ASTM D-4491 (WATER FLOW RATE 145 GPM/SF)		MIRAFI FW402, TERRATEX EP-12, OR EQUIVALENT
SEPARATION FABRIC		ASTM D-5261 (WEIGHT - 12 OZ/SY, MIN) ASTM D-4632 (GRAB TENSILE STRENGTH 290 LBS) ASTM D-4632 (ELONGATION 50% MIN) ASTM D-6241 (PUNCTURE, 775 LBS MIN., 2 IN. FLAT ROD) ASTM D-4533 (TRAPEZOID TEAR STRENGTH, 100 LBS) ASTM D-4751 (AOS SIEVE NO. 80 TO NO. 120) ASTM D-4491 (PERMITTIVITY 0.7 SEC^{-1}) ASTM D-4355 (ULTRAVIOLET RESISTANCE 70% @ 500 HRS)	REFER TO PENNDOT SPECIFICATION SECTION 735.1 - GEOTEXTILES	PENNDOT CLASS 4, TYPE A, EQUIVALENT OR BETTER NON-WOVEN, NEEDLE PUNCHED FABRIC
STONE BED		AASHTO-M-43	0.375"-0.75"	DOUBLE WASHED NO. 57 STONE (WASH LOSS OF NO MORE THAN 1.49%)
RIVER ROCK		N/A	1"-3"	DELAWARE RIVER JACKS
UNDER DRAIN PIPE		ASTM F758 (TYPE PS 28), AASHTO-M-278, AASHTO M252-SP, OR AASHTO M294-SP AASHTO CLASS II (PERFORATION PATTERN)	RIGID SCHEDULE 40 PVC, SDR35, OR HDPEP	MINIMUM OF 6" OF GRAVEL OVER CROWN OF PIPES. PERFORATIONS IN UNDERDRAIN ARE ONLY FOR SECTIONS OF PIPE WITHIN STONE BED. PERFORATIONS SHALL BE LOCATED IN THE OUTSIDE VALLEYS OF THE CORRUGATIONS, BE CIRCULAR OR SLOTTED DEPENDING ON THE PIPE DIAMETER, AND EVENLY SPACED AROUND THE CIRCUMFERENCE AND LENGTH OF THE PIPE.
DISTRIBUTION PIPE		ASTM F758 (TYPE PS 28), AASHTO-M-278, AASHTO M252-SP, OR AASHTO M294-SP AASHTO CLASS II (PERFORATION PATTERN)	RIGID SCHEDULE 40 PVC, SDR35, OR HDPEP	MINIMUM OF 6" OF GRAVEL OVER CROWN OF PIPES. PERFORATIONS IN UNDERDRAIN ARE ONLY FOR SECTIONS OF PIPE WITHIN STONE BED. PERFORATIONS SHALL BE LOCATED IN THE OUTSIDE VALLEYS OF THE CORRUGATIONS, BE CIRCULAR OR SLOTTED DEPENDING ON THE PIPE DIAMETER, AND EVENLY SPACED AROUND THE CIRCUMFERENCE AND LENGTH OF THE PIPE.
TOPSOIL (AS PART OF PCSM BMP - SOIL MEDIA COMPOSITION)		ASTM D5268 - STANDARD SPECIFICATION FOR TOPSOIL ASTM D4972 - TEST METHOD OF pH FOR SOILS	<u>% BY WEIGHT:</u> SAND: 25-75%; SILT: 15-40%; CLAY: 5-20% ORGANIC CONTENT: 2-8%; pH: 7.5; SOLUBLE SALTS: <500 PPM	THE CLAY CONTENT OF THE TOPSOIL SHALL BE LESS THAN 10% (% BY VOLUME); SILT SHALL BE LESS THAN 35% (% BY VOLUME). TOPSOIL SHALL BE A LOAMY SAND, CLAY LOAM, LOAM, SILT LOAM, OR SANDY CLAY LOAM; SUITABLE FOR FINAL USE, FREE OF ALL DEBRIS AND ROCKS OVER 3" IN DIAMETER. TOPSOIL MUST ALSO BE FREE OF VIABLE PLANTS OR PLANT PARTS. ALL TOPSOIL SHALL BE TESTED BY A REPUTABLE LABORATORY FOR PH AND SOLUBLE SALTS. IF NEEDED, PH CORRECTION MATERIAL SHALL BE APPLIED AT A RATE SUFFICIENT TO CORRECT THE PH TO A RANGE OF 6.0 TO 7.0. SOLUBLE SALTS SHALL NOT BE HIGHER THAN 500 PARTS PER MILLION.
HARDWOOD MULCH		N/A	MAXIMUM 3" IN SIZE PIECES	COMPOSITION BY VOLUME: 70% SHREDDED BARK, 30% SHREDDED HARDWOOD COLOR: BROWN FREE OF TRASH, DEBRIS AND OTHER NON-ORGANIC MATERIALS
SAND		CLEAN AASHTO-M-6 OR ASTM-C-33 CONCRETE SAND	0.02" TO 0.04"	SAND SUBSTITUTIONS SUCH AS DIABASE AND GRAYSTONE #10 ARE NOT ACCEPTABLE. NO CALCIUM CARBONATED OR DOLOMITIC SAND SUBSTITUTIONS ARE ACCEPTABLE. NO "ROCK DUST" CAN BE USED FOR SAND.
COMPOST		CERTIFIED BY THE U.S. COMPOSTING COUNCIL'S SEAL OF TESTING PROGRAM (STA)	N/A	PARAMETER: ALLOWABLE RANGE pH: 5.5 - 8.0; MOISTURE CONTENT: 35% -55%; C:N RATIO: 15-30:1; ORGANIC MATTER: >40%; PARTICLE SIZE: <1 INCH; SOLUBLE SALTS: <4.0 mmhos (dS); BULK DENSITY: < 1000LBS/ CUYD; FOREIGN MATTER < 1% BU WEIGHT
PEA GRAVEL		ASTM D-448	0.125" - 0.375"	DOUBLE WASHED NO. 8 OR NO. 9 STONE (WASH LOSS OF NO MORE THAN 1.49%)
SOIL MEDIA		N/A		A BLEND OF A RATIO OF SAND, TOPSOIL AND ORGANICS FOR THE PURPOSE OF FILTERING STORMWATER, PROMOTING EVAPOTRANSPIRATION, AND PLANT GROWTH WITHIN THE FACILITY. <u>GENERAL CRITERIA:</u> THE MATERIAL SHALL BE LOOSE AND EASILY BROKEN INTO SMALL PIECES. IT SHALL BE WELL MIXED AND HOMOGENOUS PRIOR TO PLACEMENT. IT SHALL BE FREE OF WOOD PIECES, PLASTIC, AND OTHER FOREIGN MATTER. IT SHALL HAVE NO VISIBLE FREE WATER. IT SHALL BE CLASSIFIED AS A USDA SOIL TYPE OF SILT LOAM, LOAMY SAND, SANDY LOAM OR LOAM. <u>PERFORMANCE STANDARD:</u> THE MIXTURE SHALL PROVIDE A MINIMUM IN SERVICE FLOW RATE/HYDRAULIC CONDUCTIVITY (ASTM F1815) 75% PROCTOR (ASTM D698) 2-6 IN/HR. PROVIDE LAB TEST REPORT FOR VERIFICATION AS WELL AS A 1 GALLON SAMPLE TO BE HELD FOR COMPARISON. <u>ALTERNATE SOIL MEDIA SPECIFICATIONS:</u> THE CONTRACTOR MAY SUBMIT AN ALTERNATE MIX DESIGN FOR APPROVAL TO THE LICENSED PROFESSIONAL PROVIDED THAT IT MEETS THE MINIMUM PERFORMANCE REQUIREMENTS OF THE SPECIFIED MIX. MINIMUM SUBMITTALS INCLUDE TESTING DOCUMENTATION, EXAMPLES OF SUCCESSFUL IMPLEMENTATION FOR SIMILAR PROJECTS, AND OTHER RELEVANT INFORMATION AS THEY RELATE TO INFILTRATION, WATER QUALITY AND VEGETATION GROWTH.
STORMWATER MANAGEMENT FACILITY OUTFALL BARREL	RCP	ASTM C76 (CLASS IV) ASTM C443 (JOINTS AND GASKETS)	REFER TO PROFILE	
CONCRETE STRUCTURES				
INLETS, MANHOLES, PIPES, AND CULVERTS		REFER TO PENNDOT'S PUBLICATION 72M, STANDARDS FOR ROADWAY CONSTRUCTION (RC), LATEST EDITION.	REFER TO PLAN	CONSTRUCTED IN ACCORDANCE WITH THE SPECIFICATIONS SET FORTH IN PENNDOT'S PUBLICATION 408, LATEST EDITION. LADDER RUNGS SHALL BE PROVIDED WITHIN ALL STORMWATER STRUCTURES WHICH EXCEED 5-FOOT IN HEIGHT. INLETS MUST BE SIZED TO ACCEPT THE SPECIFIED PIPE SIZES WITHOUT KNOCKING OUT ANY OF THE INLET CORNERS. ALL PIPES ENTERING OR EXITING INLETS SHALL BE CUT FLUSH WITH THE INLET WALL. INLETS SHALL NOT HAVE A SUMP CONDITION IN THE BOTTOM, UNLESS DESIGNED AS A WATER QUALITY INLET. OUTLET PIPES SHALL BE FLUSH WITH THE BOTTOM OF THE BOX OR CONCRETE CHANNELS SHALL BE POURED.
REINFORCED CONCRETE HEADWALLS AND END SECTIONS		REFER TO PENNDOT'S PUBLICATION 72M, STANDARDS FOR ROADWAY CONSTRUCTION (RC), LATEST EDITION.	REFER TO PLAN	CONSTRUCTED IN ACCORDANCE WITH THE SPECIFICATIONS SET FORTH IN PENNDOT'S PUBLICATION 408, LATEST EDITION.
GRATES		REFER TO PENNDOT'S PUBLICATION 72M, STANDARDS FOR ROADWAY CONSTRUCTION (RC), LATEST EDITION.	REFER TO PLAN	ALL INLETS IN PAVED AREAS SHALL HAVE HEAVY-DUTY BICYCLE-SAFE GRATES.
FRAMES / TOP UNITS / GRADE ADJUSTMENT RINGS		REFER TO PENNDOT'S PUBLICATION 72M, STANDARDS FOR ROADWAY CONSTRUCTION (RC), LATEST EDITION.	REFER TO PLAN	ALL FRAMES, CONCRETE TOP UNITS, AND GRADE ADJUSTMENT RINGS SHALL BE SET IN A BED OF FULL MORTAR ACCORDING TO PUBLICATION 408.
CONCRETE				CONCRETE SHALL MEET THE REQUIREMENTS OF PENNSYLVANIA DEPARTMENT OF TRANSPORTATION PUBLICATION 408, SECTIONS 605, 606 AND 714.
REINFORCEMENT				REINFORCEMENT SHALL MEET THE MINIMUM REQUIREMENTS OF PENNSYLVANIA DEPARTMENT OF TRANSPORTATION PUBLICATION 408, SECTION 709.
SANITARY SEWER				
GRAVITY SEWER PIPE	PVC	SDR-21 SDR-35 (PS46) ASTM D3034 (PRODUCT STANDARD) ASTM F477 (GASKET) ASTM D3212 (INTEGRAL BELL JOINT)	REFER TO PROFILE	
FORCE MAIN SEWER PIPE	HDPE	HDPE DR-II (8" PIPE)	REFER TO PROFILE	
WATER				
WATER DISTRIBUTION PIPE	DIP	ANSI/AWWA C150 (THICKNESS DESIGN OF PIPE) ANSI/AWWA C151 (CENTRIFUGALLY CAST DIP) ANSI/AWWA C153 (FITTINGS) ANSI/AWWA C111 (RUBBER GASKET JOINTS) ANSI/AWWA C104 (CEMENT MORTAR LINING)	REFER TO PROFILE	
WATER LATERAL	WHC	TYPE K - COPPER	REFER TO DETAIL	
SITE FEATURES AND LANDSCAPING				
TOPSOIL		ASTM D5268 - STANDARD SPECIFICATION FOR TOPSOIL ASTM D4972 - TEST METHOD OF pH FOR SOILS	SEE GRADUATION OF ASTM STANDARD	TOPSOIL MUST BE FREE OF LARGE DEBRIS, ROOTS, ROCKS, BRUSH, SOD, FROZEN PARTICLES, OR OTHER FOREIGN OR OBJECTIONABLE MATERIAL THAT WOULD INHIBIT VEGETATIVE ESTABLISHMENT AND GROWTH TO MEET THE PROJECT REQUIREMENTS. TOPSOIL MUST BE SUITABLE TO SUPPORT A DENSE AND DIVERSE VEGETATIVE COVER, AS DIRECTED BY THE OWNER OR LANDSCAPE ARCHITECT.
HARDWOOD MULCH		N/A	MAXIMUM 3" IN SIZE PIECES	COMPOSITION BY VOLUME: 70% SHREDDED BARK, 30% SHREDDED HARDWOOD COLOR: BROWN FREE OF TRASH, DEBRIS AND OTHER NON-ORGANIC MATERIALS

1 **MATERIAL SPECIFICATIONS**

NOT TO SCALE

NOT FOR BUILDING/NOT FOR CONSTRUCTION

NO | BY | DATE | REVISION

SEAL

SEAL

MANAGER: CHRIS VENARCHICK
DESIGN BY: OLH | CHECKED BY: CV
DRAWN BY: OLH | CHECKED BY: CV

SCALE: N.T.S.

CLIENT
1376 CAMPUS ROAD ASSOCIATES, LLC
ONE TOWER BRIDGE
100 FRONT STREET, SUITE 560
WEST CONSHOHOCKEN, PA 19428
(571) 276-3184

PROJECT TITLE
1376 CAMPUS ROAD - PHASE 2
FINAL SUBDIVISION & LAND DEVELOPMENT PLAN
MOUNT JOY TOWNSHIP LANCASTER COUNTY, PA.

SHEET TITLE
MATERIAL SPECIFICATIONS

Land Planning
Landscape Architecture
Civil Engineering
53 West James Street
Suite 101, Lancaster, PA 17603
Tel: (717) 715-1396 Fax: (717) 435-8277
221 W. Philadelphia Street
Suite 108E, York, PA 17401
(717) 854-3803
320 N. Market Street
Suite 550W, Harrisburg, PA 17101
(717) 599-7615
E-mail: info@rgsassociates.com
www.rgsassociates.com
RGS ASSOCIATES

DATE: OCTOBER 24, 2024
PROJECT NO.: 2024J13-001

SHEET NO.: 32 OF 34

PLOTTED: Thursday, October 24, 2024 @ 09:10AM
FILENAME: P:\2024\2024J13-001\CADD\FINAL PH2\Plot\Z-Details.dwg XREFS: Details; Titleblock; Basin-Outlet-Structure IMAGES:

STORMWATER MANAGEMENT CONSTRUCTION SPECIFICATIONS

A. SITE PREPARATION
1. AREAS DESIGNATED FOR BORROW AREAS, EMBANKMENT, AND STRUCTURAL WORK SHALL BE CLEARED, GRUBBED AND STRIPPED OF TOPSOIL. ALL TREES, VEGETATION, ROOTS AND OTHER OBJECTIONABLE MATERIAL SHALL BE REMOVED.
2. CHANNEL BANKS AND SHARP BREAKS SHALL BE SLOPED TO NO STEEPER THAN 1:1. ALL TREES SHALL BE CLEARED AND GRUBBED WITHIN 15 FEET OF THE TOE OF THE EMBANKMENT.
3. AREAS TO BE COVERED BY THE RESERVOIR WILL BE CLEARED OF ALL TREES, BRUSH, LOGS, FENCES, RUBBISH AND OTHER OBJECTIONABLE MATERIAL UNLESS OTHERWISE DESIGNATED ON THE PLANS.
4. TREES, BRUSH, AND STUMPS SHALL BE CUT APPROXIMATELY LEVEL WITH THE GROUND SURFACE. FOR DRY STORMWATER MANAGEMENT PONDS, A MINIMUM OF A 25-FOOT RADIUS AROUND THE INLET STRUCTURE SHALL BE CLEARED.
5. ALL CLEARED AND GRUBBED MATERIAL SHALL BE DISPOSED OF OUTSIDE AND BELOW THE LIMITS OF THE EMBANKMENT AS DIRECTED BY THE OWNER OR HIS REPRESENTATIVE.
6. WHEN SPECIFIED, A SUFFICIENT QUANTITY OF TOPSOIL WILL BE STOCKPILED IN A SUITABLE LOCATION FOR USE ON THE EMBANKMENT AND OTHER DESIGNATED AREAS.

B. EARTH FILL - MATERIAL
1. THE FILL MATERIAL SHALL BE TAKEN FROM APPROVED DESIGNATED BORROW AREAS. IT SHALL BE FREE OF ROOTS, STUMPS, WOOD, RUBBISH, STONES GREATER THAN 6", FROZEN OR OTHER OBJECTIONABLE MATERIALS.
2. FILL MATERIAL FOR THE CENTER OF THE EMBANKMENT AND CUTOFF TRENCH SHALL BE IN ACCORDANCE WITH THE MATERIAL SPECIFICATIONS INCLUDED ON THIS PLAN. CONSIDERATION MAY BE GIVEN TO THE USE OF OTHER MATERIALS IN THE EMBANKMENT IF DESIGNED BY A GEOTECHNICAL ENGINEER. SUCH SPECIAL DESIGNS MUST HAVE CONSTRUCTION SUPERVISED BY A GEOTECHNICAL ENGINEER.
3. MATERIALS USED IN THE OUTER SHELL OF THE EMBANKMENT MUST HAVE THE CAPABILITY TO SUPPORT VEGETATION OF THE QUALITY REQUIRED TO PREVENT EROSION OF THE EMBANKMENT.

C. EARTH FILL - PLACEMENT
1. AREAS ON WHICH FILL IS TO BE PLACED SHALL BE SCARIFIED PRIOR TO PLACEMENT OF FILL.
2. FILL MATERIALS SHALL BE PLACED IN MAXIMUM 8 INCH THICK (BEFORE COMPACTION) LAYERS WHICH ARE TO BE CONTINUOUS OVER THE ENTIRE LENGTH OF THE FILL.
3. THE MOST PERMEABLE BORROW MATERIAL SHALL BE PLACED IN THE DOWNSTREAM PORTIONS OF THE EMBANKMENT.
4. THE PRINCIPAL SPILLWAY (I.E. OUTLET STRUCTURE AND DISCHARGE PIPE) MUST BE INSTALLED CONCURRENTLY WITH FILL PLACEMENT AND NOT EXCAVATED INTO THE EMBANKMENT.

D. COMPACTION
1. THE MOVEMENT OF THE HAULING AND SPREADING EQUIPMENT OVER THE FILL SHALL BE CONTROLLED SO THAT THE ENTIRE SURFACE OF EACH LIFT SHALL BE TRAVERSED BY NOT LESS THAN ONE TREAD TRACK OF HEAVY EQUIPMENT OR COMPACTION SHALL BE ACHIEVED BY A SHEEPSFOOT OR VIBRATORY ROLLER.
2. THE FILL MATERIAL SHALL CONTAIN SUFFICIENT MOISTURE SUCH THAT THE REQUIRED DEGREE OF COMPACTION WILL BE OBTAINED WITH THE EQUIPMENT USED.
3. THE FILL MATERIAL SHALL CONTAIN SUFFICIENT MOISTURE SO THAT IF FORMED INTO A BALL IT WILL NOT CRUMBLE, YET NOT BE SO WET THAT WATER CAN BE SQUEEZED OUT.
4. THE MAXIMUM PARTICLE SIZE IS SIX INCHES OR LESS THAN ⅔ OF THE LIFT THICKNESS. FIVE PASSES OF HTE OCMPACTION EQUIPMENT OVER THE ENTIRE SURFACE OF EACH LIFT IS REQUIRED. EMBANKMENT COMPACTION TO VISIBLE NONMOVEMENT IS ALSO REQUIRED.
5. WHEN REQUIRED BY THE REVIEWING AGENCY, THE MINIMUM REQUIRED DENSITY SHALL NOT BE LESS THAN 95% OF MAXIMUM DRY DENSITY WITH A MOISTURE CONTENT WITHIN +/-2% OF THE OPTIMUM. EACH LAYER OF FILL SHALL BE COMPACTED AS NECESSARY TO OBTAIN THAT DENSITY, AND IS TO BE CERTIFIED BY THE ENGINEER AT THE TIME OF CONSTRUCTION. ALL COMPACTION TO BE DETERMINED BY AASHTO METHOD T-99 (STANDARD PROCTOR).
6. COMPACTION REQUIREMENTS SHALL BE THE SAME AS THOSE FOR THE EMBANKMENT TO ASSURE MAXIMUM DENSITY AND MINIMUM PERMEABILITY
7. THE CORE SHALL BE CONSTRUCTED CONCURRENTLY WITH THE OUTER SHELL OF THE EMBANKMENT.
8. THE TRENCH SHALL BE DEWATERED DURING BACKFILLING AND COMPACTION OPERATIONS.

E. CUT OFF TRENCH
1. THE CUTOFF TRENCH SHALL BE EXCAVATED INTO IMPERVIOUS MATERIAL ALONG OR PARALLEL TO THE CENTERLINE OF THE EMBANKMENT AS SHOWN ON THE PLANS.
2. THE BOTTOM WIDTH OF THE TRENCH SHALL BE GOVERNED BY THE EQUIPMENT USED FOR EXCAVATION, WITH THE MINIMUM WIDTH BEING FOUR FEET.
3. THE DEPTH SHALL BE AT LEAST TWO FEET BELOW EXISTING GRADE OR AS SHOWN ON THE PLANS.
4. THE SIDE SLOPES OF THE TRENCH SHALL BE 1 TO 1 OR FLATTER.
5. THE BACKFILL SHALL BE COMPACTED WITH CONSTRUCTION EQUIPMENT, ROLLERS, OR HAND TAMPERS TO ASSURE MAXIMUM DENSITY AND MINIMUM PERMEABILITY.

F. EMBANKMENT CORE
1. THE CORE SHALL BE PARALLEL TO THE CENTERLINE OF THE EMBANKMENT AS SHOWN ON THE PLANS.
2. THE TOP WIDTH OF THE CORE SHALL BE A MINIMUM OF FOUR FEET.
3. THE HEIGHT SHALL EXTEND UP TO AT LEAST THE 10 YEAR WATER ELEVATION OR AS SHOWN ON THE PLANS.
4. THE SIDE SLOPES SHALL BE 1 TO 1 OR FLATTER.
5. THE CORE SHALL BE COMPACTED WITH CONSTRUCTION EQUIPMENT, ROLLERS, OR HAND TAMPERS TO ASSURE MAXIMUM DENSITY AND MINIMUM PERMEABILITY. IN ADDITION, THE CORE SHALL BE PLACED CONCURRENTLY WITH THE OUTER SHELL OF EMBANKMENT.

G. STRUCTURE BACKFILL WITH FLOWABLE FILL
1. BACKFILL ADJACENT TO PIPES OR STRUCTURES SHALL BE OF THE TYPE AND QUALITY CONFORMING TO THAT SPECIFIED FOR THE ADJOINING FILL MATERIAL.
2. THE FILL SHALL BE PLACED IN HORIZONTAL LAYERS NOT TO EXCEED FOUR INCHES IN THICKNESS AND COMPACTED BY HAND TAMPERS OR OTHER MANUALLY DIRECTED COMPACTION EQUIPMENT. THE MATERIAL NEEDS TO FILL COMPLETELY ALL SPACES UNDER AND ADJACENT TO THE PIPE.
3. AT NO TIME DURING THE BACKFILLING OPERATION SHALL DRIVEN EQUIPMENT BE ALLOWED TO OPERATE CLOSER THAN FOUR FEET, MEASURED HORIZONTALLY, TO ANY PART OF A STRUCTURE.
4. UNDER NO CIRCUMSTANCES SHALL EQUIPMENT BE DRIVEN OVER ANY PART OF A CONCRETE STRUCTURE OR PIPE, UNLESS THERE IS A COMPACTED FILL OF 24" OR GREATER OVER THE STRUCTURE OR PIPE.
5. THE MIXTURE SHALL HAVE A 100-200 PSI; 28 DAY UNCONFINED COMPRESSIVE STRENGTH. THE FLOWABLE FILL SHALL HAVE A MINIMUM PH OF 4.0 AND A MINIMUM RESISTIVITY OF 2,000 OHM-CM.
6. MATERIAL SHALL BE PLACED SUCH THAT A MINIMUM OF 6" (MEASURED PERPENDICULAR TO THE OUTSIDE OF THE PIPE) OF FLOWABLE FILL SHALL BE UNDER (BEDDING), OVER AND, ON THE SIDES OF THE PIPE.
7. FLOWABLE FILL ONLY NEEDS TO EXTEND UP TO THE SPRING LINE FOR RIGID CONDUITS.
8. AVERAGE SLUMP OF THE FILL SHALL BE 7" TO ASSURE FLOWABILITY OF THE MATERIAL.
9. ADEQUATE MEASURES SHALL BE TAKEN (SAND BAGS, ETC.) TO PREVENT FLOATING THE PIPE.
10. THE MATERIAL SHALL COMPLETELY FILL ALL VOIDS ADJACENT TO THE FLOWABLE FILL ZONE.
11. BACKFILL MATERIAL OUTSIDE THE STRUCTURAL BACKFILL (FLOWABLE FILL) ZONE SHALL BE OF THE TYPE AND QUALITY CONFORMING TO THAT SPECIFIED FOR THE CORE OF THE EMBANKMENT OR OTHER EMBANKMENT MATERIALS.

H. PIPE CONDUITS
1. ALL PIPES SHALL BE CIRCULAR IN CROSS SECTION.

I. REINFORCED CONCRETE PIPE - MATERIALS
REINFORCED CONCRETE PIPE SHALL HAVE BELL AND SPIGOT JOINTS WITH RUBBER GASKETS AND SHALL EQUAL OR EXCEED ASTM C443.

J. REINFORCED CONCRETE PIPE - BEDDING
1. REINFORCED CONCRETE PIPE CONDUITS SHALL BE LAID IN A CONCRETE BEDDING/CRADLE FOR THEIR ENTIRE LENGTH. THIS BEDDING/CRADLE SHALL CONSIST OF HIGH SLUMP CONCRETE PLACED UNDER THE PIPE AND UP THE SIDES OF THE PIPE AT LEAST 50% OF ITS OUTSIDE DIAMETER WITH A MINIMUM THICKNESS OF 6 INCHES.
2. WHERE A CONCRETE CRADLE IS NOT NEEDED FOR STRUCTURAL REASONS, FLOWABLE FILL MAY BE USED AS DESCRIBED IN THE "STRUCTURE BACKFILL" SECTION OF THIS STANDARD.
3. GRAVEL BEDDING IS NOT PERMITTED.

K. REINFORCED CONCRETE PIPE - LAYING PIPE
1. BELL AND SPIGOT PIPE SHALL BE PLACED WITH THE BELL END UPSTREAM.
2. JOINTS SHALL BE MADE IN ACCORDANCE WITH RECOMMENDATIONS OF THE MANUFACTURER OF THE MATERIAL.
3. AFTER THE JOINTS ARE SEALED FOR THE ENTIRE LINE, THE BEDDING SHALL BE PLACED SO THAT ALL SPACES UNDER THE PIPE ARE FILLED.
4. CARE SHALL BE EXERCISED TO PREVENT ANY DEVIATION FROM THE ORIGINAL LINE AND GRADE OF THE PIPE.
5. THE FIRST JOINT MUST BE LOCATED WITHIN 4 FEET FROM THE RISER.

L. REINFORCED CONCRETE PIPE - BACKFILLING
1. SHALL CONFORM TO "STRUCTURE BACKFILL".

M. CONCRETE STRUCTURES
1. CONCRETE SHALL MEET THE REQUIREMENTS OF PENNSYLVANIA DEPARTMENT OF TRANSPORTATION PUBLICATION 408, SECTIONS 605, 606 AND 714; AND AS MODIFIED HEREON.
2. REINFORCEMENT SHALL MEET THE MINIMUM REQUIREMENTS OF PENNSYLVANIA DEPARTMENT OF TRANSPORTATION PUBLICATION 408, SECTION 709.

N. ROCK RIPRAP
1. ROCK RIPRAP SHALL MEET THE REQUIREMENTS OF PENNSYLVANIA DEPARTMENT OF TRANSPORTATION PUBLICATION 408.

STABILIZATION SPECIFICATIONS

1. UPON TEMPORARY CESSATION OF AN EARTH DISTURBANCE ACTIVITY OR ANY STAGE OR PHASE OF AN ACTIVITY WHERE A CESSATION OF EARTH DISTURBANCE ACTIVITIES WILL EXCEED 4 DAYS, THE SITE SHALL BE IMMEDIATELY SEEDED, MULCHED, OR OTHERWISE PROTECTED FROM ACCELERATED EROSION AND SEDIMENTATION PENDING FUTURE EARTH DISTURBANCE ACTIVITIES.
2. PERMANENT STABILIZATION IS DEFINED AS A MINIMUM UNIFORM 70% PERENNIAL VEGETATIVE COVER OR OTHER PERMANENT NON-VEGETATIVE COVER WITH A DENSITY SUFFICIENT TO RESIST ACCELERATED SURFACE EROSION AND SUBSURFACE CHARACTERISTICS SUFFICIENT TO RESIST SLIDING AND OTHER MOVEMENTS.
3. TOPSOIL REQUIRED FOR THE ESTABLISHMENT OF VEGETATION SHALL BE STOCKPILED AT THE LOCATION(S) SHOWN ON THE PLAN DRAWINGS IN THE AMOUNT NECESSARY TO COMPLETE THE FINISH GRADING OF ALL EXPOSED AREAS THAT ARE TO BE STABILIZED BY VEGETATION. EACH STOCKPILE SHALL BE PROTECTED IN THE MANNER SHOWN ON THE PLAN DRAWINGS. TOPSOIL STOCKPILE HEIGHTS SHALL NOT EXCEED 35 FEET. STOCKPILE SIDE SLOPES MUST BE 2:1 OR FLATTER.
4. AREAS WHICH ARE TO BE TOPSOILED SHALL BE SCARIFIED TO A MINIMUM DEPTH OF 3 TO 5 INCHES - 6 TO 12 INCHES ON COMPACTED SOILS - PRIOR TO PLACEMENT OF TOPSOIL. AREAS TO BE VEGETATED SHALL HAVE A MINIMUM 6 INCHES OF TOPSOIL IN PLACE PRIOR TO SEEDING AND MULCHING. FILL OUTSLOPES SHALL HAVE A MINIMUM OF 2 INCHES OF TOPSOIL.
5. TOPSOIL SHOULD NOT BE PLACED WHILE THE TOPSOIL OR SUBSOIL IS IN A FROZEN OR MUDDY CONDITION, WHEN THE SUBSOIL IS EXCESSIVELY WET, OR IN A CONDITION THAT MAY OTHERWISE BE DETRIMENTAL TO PROPER GRADING AND SEEDBED PREPARATION. COMPACTED SOILS SHOULD BE SCARIFIED 6 TO 12 INCHES ALONG CONTOUR WHENEVER POSSIBLE PRIOR TO SEEDING.
6. DURING NON-GERMINATING PERIODS, MULCH MUST BE APPLIED AT THE SPECIFIED RATES. DISTURBED AREAS WHICH ARE NOT AT FINISHED GRADE AND WHICH WILL BE RE-DISTURBED WITHIN 1 YEAR MUST BE STABILIZED IN ACCORDANCE WITH THE TEMPORARY VEGETATIVE STABILIZATION SPECIFICATIONS. DISTURBED AREAS WHICH ARE AT FINAL GRADE OR WHICH WILL NOT BE RE-DISTURBED WITHIN 1 YEAR MUST BE STABILIZED IN ACCORDANCE WITH THE PERMANENT VEGETATIVE STABILIZATION SPECIFICATIONS.
7. AN EROSION CONTROL BLANKET WILL BE INSTALLED ON ALL DISTURBED SLOPES 3:1 OR STEEPER, ALL AREAS OF CONCENTRATED FLOWS, AND DISTURBED AREAS WITHIN 50' OF A SURFACE WATER.
8. STRAW AND HAY MULCH SHOULD BE ANCHORED IMMEDIATELY AFTER APPLICATION TO PREVENT BEING WINDBLOWN. A TRACTOR-DRAWN IMPLEMENT MAY BE USED TO "CRIMP" THE STRAW OR HAY INTO THE SOIL. THIS METHOD IS LIMITED TO SLOPES NO STEEPER THAN 3:1. THE MACHINERY SHOULD BE OPERATED ON THE CONTOUR. (NOTE: CRIMPING OF HAY OR STRAW BY RUNNING OVER IT WITH TRACKED MACHINERY IS NOT RECOMMENDED). A WOOD CELLULOSE FIBER MAY BE SPREAD OVER THE STRAW MULCH AT A RATE OF 1,500 LB./ACRE.
9. TRACKING SLOPES IS REQUIRED BY RUNNING TRACKED MACHINERY UP AND DOWN THE SLOPE, LEAVING TREAD MARKS PARALLEL TO THE CONTOUR. (NOTE: IF A BULLDOZER IS USED, THE BLADE SHALL BE UP.) CARE SHOULD BE EXERCISED ON SOILS HAVING A HIGH CLAY CONTENT TO AVOID OVER-COMPACTION.

TEMPORARY SEEDING SPECIFICATIONS

1. IN ORDER TO ESTABLISH A QUICK GRASS COVER OVER DISTURBED AREAS, A TEMPORARY SEED MIXTURE SHALL BE USED AS FOLLOWS:

SPECIES:	PENNDOT FORMULA E
% PURE LIVE SEED:	86%
APPLICATION RATE:	48 LB./ACRE
FERTILIZER TYPE:	5-5-5
FERTILIZE RATE:	1,000 LB./ACRE
LIMING RATE:	1 T./ACRE
MULCH TYPE:	STRAW
MULCHING RATE:	3 T./ACRE

2. STABILIZATION EFFORTS DURING THE NON-GERMINATING PERIOD, OCT. 15 TO MARCH 15, SHOULD BE MULCHED WITH CLEAN STRAW. (EQUIVALENT TO 0.75" TO 1" DEEP). CLEAN STRAW MULCH SHOULD NOT BE FINELY CHOPPED OR BROKEN DURING APPLICATION.
3. STRAW AND HAY MULCH SHOULD BE ANCHORED OR TACKIFIED IMMEDIATELY AFTER APPLICATION TO PREVENT BEING WINDBLOWN. A TRACTOR-DRAWN IMPLEMENT MAY BE USED TO "CRIMP" THE STRAW OR HAY INTO THE SOIL - ABOUT 3 INCHES. THIS METHOD SHOULD BE LIMITED TO SLOPES NO STEEPER THAN 3H:1V. THE MACHINERY SHOULD BE OPERATED ON THE CONTOUR.
4. MULCH ON SLOPES OF 8% OR STEEPER SHOULD BE HELD IN PLACE WITH NETTING. LIGHTWEIGHT PLASTIC, FIBER, OR PAPER NETS MAY BE STAPLED OVER THE MULCH ACCORDING TO MANUFACTURER'S RECOMMENDATIONS.
5. ALL AREAS SHALL BE TEMPORARILY STABILIZED UPON CESSATION OF WORK FOR 4 DAYS OR MORE, OR AS SOON AS ANY DISTURBED AREA REACHES ITS FINAL GRADE.

PERMANENT SEEDING SPECIFICATIONS

1. ALL DISTURBED AREAS THAT ARE NOT TO BE PAVED SHALL BE COVERED WITH GRASS OR A LEGUME IN ORDER TO MINIMIZE EROSION, UNLESS OTHERWISE DIRECTED BY THE OWNER AS FOLLOWS:

TOPSOIL PLACEMENT DEPTH:	6 IN.
SPECIES:	PENNDOT FORMULA B
% PURE LIVE SEED:	83%
APPLICATION RATE:	203 LB./ACRE
FERTILIZER TYPE:	38-0-0
FERTILIZE RATE:	242 LB./ACRE
LIMING RATE:	2 T./ACRE
MULCH TYPE:	STRAW
MULCHING RATE:	3 T./ACRE
ANCHOR MATERIAL:	WOOD FIBER
ANCHOR METHOD:	HYDRAULICALLY
RATE OF ANCHOR MATERIAL APPL.:	774 LB./ACRE
SEEDING SEASON DATE:	MARCH 15 - JUNE 1/AUGUST 1 TO OCTOBER 15

2. ALL DISTURBED AREAS WITH STEEP SLOPES SHALL BE COVERED WITH GRASS OR A LEGUME IN ORDER TO MINIMIZE EROSION, UNLESS OTHERWISE DIRECTED BY THE OWNER AS FOLLOWS:

TOPSOIL PLACEMENT DEPTH:	6 IN.
SPECIES:	PENNDOT FORMULA D
% PURE LIVE SEED:	82%
APPLICATION RATE:	242 LB./ACRE
FERTILIZER TYPE:	38-0-0
FERTILIZE RATE:	242 LB./ACRE
LIMING RATE:	2 T./ACRE
MULCH TYPE:	STRAW
MULCHING RATE:	3 T./ACRE
ANCHOR MATERIAL:	WOOD FIBER
ANCHOR METHOD:	HYDRAULICALLY
RATE OF ANCHOR MATERIAL APPL.:	774 LB./ACRE
SEEDING SEASON DATE:	MARCH 15 - JUNE 1/AUGUST 1 - OCTOBER 15

3. MULCHING SHALL BE USED TO PROTECT SEEDING AND HELP IN PREVENTING RUNOFF.
   A. CLEAN STRAW MULCH SHALL BE REQUIRED IN ALL DISTURBED AREAS (EQUIVALENT TO 0.75" TO 1" DEEP). CLEAN STRAW MULCH SHOULD NOT BE FINELY CHOPPED OR BROKEN DURING APPLICATION.
   B. STRAW AND HAY MULCH SHOULD BE ANCHORED OR TACKIFIED IMMEDIATELY AFTER APPLICATION TO PREVENT BEING WINDBLOWN. A TRACTOR-DRAWN IMPLEMENT MAY BE USED TO "CRIMP" THE STRAW OR HAY INTO THE SOIL - ABOUT 3 INCHES. THIS METHOD SHOULD BE LIMITED TO SLOPES NO STEEPER THAN 3H:1V. THE MACHINERY SHOULD BE OPERATED ON THE CONTOUR.
   C. POLYMERIC AND GUM TACKIFIERS MIXED AND APPLIED ACCORDING TO MANUFACTURER'S RECOMMENDATIONS MAY BE USED TO TACK MULCH.
   D. SYNTHETIC BINDERS, OR CHEMICAL BINDERS, MAY BE USED AS RECOMMENDED BY THE MANUFACTURER TO ANCHOR MULCH PROVIDED SUFFICIENT DOCUMENTATION IS PROVIDED TO SHOW THEY ARE NON-TOXIC TO NATIVE PLANT AND ANIMAL SPECIES.
   E. MULCH ON SLOPES OF 8% OR STEEPER SHOULD BE HELD IN PLACE WITH NETTING. LIGHTWEIGHT PLASTIC, FIBER, OR PAPER NETS MAY BE STAPLED OVER THE MULCH ACCORDING TO MANUFACTURER'S RECOMMENDATIONS.
   F. SHREDDED PAPER HYDROMULCH SHOULD NOT BE USED ON SLOPES STEEPER THAN 5%. WOOD FIBER HYDROMULCH MAY BE APPLIED ON STEEPER SLOPES PROVIDED A TACKIFIER IS USED.
4. FOR FURTHER INFORMATION ON SEED MIXES, SEE THE E & S WORKSHEETS IN THE CHAPTER 102 REGULATIONS.
5. WELL IN ADVANCE OF THE NEED TO PERMANENTLY SEED ANY DISTURBED AREA, THE CONTRACTOR SHALL OBTAIN AND FORWARD A SOIL AGRONOMY TESTING REPORT FROM AN APPROVED SOILS LABORATORY SUCH AS PENNSYLVANIA STATE UNIVERSITY'S AGRICULTURAL ANALYTICAL SERVICES LABORATORY. THE REPORT SHALL DETERMINE THE ACTUAL LIME AND FERTILIZER RATES FOR THE ON-SITE TOPSOIL. THE CONTRACTOR SHALL FORWARD THE FINAL REPORT TO THE LANDSCAPE ARCHITECT OR CLIENT'S REPRESENTATIVE UPON RECEIPT.
6. ALL SOIL AMENDMENTS SHALL BE INSTALLED PER THE SOIL AGRONOMY REPORT, AND SHALL BE PROVIDED BY THE CONTRACTOR.
7. APPLY AMENDMENTS ON-SITE, AND MIX SOIL TO FULLY ADDRESS ALL EXISTING SOIL DEFICIENCIES. DO NOT APPLY AMENDMENTS NOR TILL IF EXISTING SOIL OR SUBGRADE IS FROZEN, MUDDY, OR EXCESSIVELY WET.

TABLE A
Seeding Requirements

Formula and Species	% By Weight	Minimum % Purity	Minimum % Germination	Max % Weed Seed	Seeding Rate lb/1000 yd²
Formula B Mix					**44.0 Total**
• Perennial Ryegrass mixture (Lolium perenne). A combination of improved certified varieties with No one variety exceeding 50% of the total Ryegrass component	20	97	90	0.10	8.5
• Creeping Red Fescue or Chewings Fescue (Festuca rubra or ssp commutate) (Improved and Certified)	30	97	85	0.10	12.5
• Kentucky Bluegrass mixture (Poa pratensis). A combination of improved certified varieties with no one variety exceeding 50% of the total Bluegrass component.	45	97	80	0.15	21.0
• Annual Ryegrass (Lolium multiflorum)	5	95	90	0.10	2.0
Formula C Conservation Mix					**12.0 Total**
• Crownvetch (Coronilla varia)	45	99	70*	0.10	5.5
• Annual Ryegrass (Lolium multiflorum)	55	95	90	0.10	6.5
Formula D Conservation Mix					**50.0 Total**
• Tall Fescue (Festuca arundinacea var. Kentucky 31)	60	96	85	0.10	30.0
• Creeping Red Fescue or Chewings Fescue (Festuca rubra or ssp commutate) (Improved and Certified)	30	97	85	0.10	15.0
• Annual Ryegrass (Lolium multiflorum)	10	95	90	0.10	5.0
Formula E					**10.0 Total**
• Annual Ryegrass (Lolium multiflorum)	100	95	90	0.10	10.0
Formula L Mix					**48.0 Total**
• Hard Fescue mixture (Festuca longifolia). A combination of improved certified varieties with no one variety exceeding 50% of the total Hard Fescue component	55	97	85	0.10	26.4
• Creeping Red Fescue (Festuca rubra) (Improved and Certified)	35	97	85	0.10	16.8
• Annual Ryegrass (Lolium multiflorum)	10	95	90	0.10	4.8

BMP TYPE	CONSTRUCTION NOTES	CRITICAL STAGES OF PROFESSIONAL OVERSIGHT	OPERATION AND MAINTENANCE
CONVEYANCE FACILITIES (NOT A PCSM BMP)	1. ALL STORM DRAIN AND CONVEYANCE SWALES SHALL BE INSTALLED AT THE LOCATION AND IN ACCORDANCE WITH THE DETAILS AND SPECIFICATIONS INCLUDED ON THIS PLAN, UNLESS OTHERWISE REQUIRED BY THE MUNICIPALITY.	1. VERIFICATION OF INLET STRUCTURE LOCATION, SIZE, DEPTH, AND CONNECTING PIPE INVERTS OR CHANNEL GEOMETRY	GENERAL REQUIREMENTS: • THE FACILITY SHALL ALSO BE CLEANED IMMEDIATELY AFTER PETROLEUM SPILLS. THE OWNER SHALL CONTACT THE APPROPRIATE REGULATORY AGENCIES (BUT NOT LIMITED TO THE PA DEP AND THE TOWNSHIP) IN THE EVENT OF A SPILL AND CLEANUP OPERATION. • CLEAN OUT AND DISPOSE OF ACCUMULATED OIL, GREASE, AND SEDIMENTS. REMOVE ACCUMULATED TRASH AND DEBRIS. THE CLEAN OUT AND DISPOSAL TECHNIQUES SHOULD BE ENVIRONMENTALLY ACCEPTABLE AND IN ACCORDANCE WITH LOCAL REGULATIONS. SEDIMENT AND DEBRIS SHALL BE REMOVED FROM THE UNDERGROUND SWM FACILITY BY VACUUM TRUCK OR OTHER MANUAL MEANS. THE OWNER SHALL DISPOSE OF REMOVED SEDIMENT AND DEBRIS IN ACCORDANCE WITH THE RECYCLING AND DISPOSAL NOTES. REGULAR MAINTENANCE (AFTER EACH MEASURABLE RAINFALL EVENT 1.0 INCH OR GREATER OR A MINIMUM OF TWICE PER YEAR): • REMOVE ACCUMULATED SEDIMENT, TRASH, AND DEBRIS FROM THE FACILITY. • CLEAN OUT AND DISPOSE OF ACCUMULATED OIL, GREASE, AND SEDIMENTS. REMOVE ACCUMULATED TRASH AND DEBRIS. THE CLEAN OUT AND DISPOSAL TECHNIQUES SHOULD BE ENVIRONMENTALLY ACCEPTABLE AND IN ACCORDANCE WITH LOCAL REGULATIONS. SEDIMENT AND DEBRIS SHALL BE REMOVED FROM THE UNDERGROUND SWM FACILITY BY VACUUM TRUCK OR OTHER MANUAL MEANS. THE OWNER SHALL DISPOSE OF REMOVED SEDIMENT AND DEBRIS IN ACCORDANCE WITH THE RECYCLING AND DISPOSAL NOTES. DOCUMENTATION REQUIREMENTS: • PREPARE ANNUAL INSPECTION REPORTS AS REQUIRED BY THE MUNICIPAL ORDINANCE AND STORMWATER AGREEMENT. • PREPARE AND MAINTAIN INSPECTION, REPAIR, AND REPLACEMENT LOGS/REPORTS IN ACCORDANCE WITH PA DEP CHAPTER 102 REGULATIONS AND THE CONDITIONS OF THE NPDES PERMIT.
OUTLET PROTECTION (NOT A PCSM BMP)	1. RIP-RAP APRONS/PLUNGE POOLS SHALL BE INSTALLED AT THE LOCATION AND IN ACCORDANCE WITH THE DETAILS INCLUDED ON THIS PLAN.	1. VISUAL INSPECTION OF THE RIP-RAP APRONS/PLUNGE POOLS TO ENSURE INSTALLATION IS IN GENERAL CONFORMANCE WITH THE PLAN.	GENERAL REQUIREMENTS: • THE FACILITY SHALL ALSO BE CLEANED IMMEDIATELY AFTER PETROLEUM SPILLS. THE OWNER SHALL CONTACT THE APPROPRIATE REGULATORY AGENCIES (BUT NOT LIMITED TO THE PA DEP AND THE TOWNSHIP) IN THE EVENT OF A SPILL AND CLEANUP OPERATION. • CLEAN OUT AND DISPOSE OF ACCUMULATED OIL, GREASE, AND SEDIMENTS. REMOVE ACCUMULATED TRASH AND DEBRIS. THE CLEAN OUT AND DISPOSAL TECHNIQUES SHOULD BE ENVIRONMENTALLY ACCEPTABLE AND IN ACCORDANCE WITH LOCAL REGULATIONS. SEDIMENT AND DEBRIS SHALL BE REMOVED FROM THE UNDERGROUND SWM FACILITY BY VACUUM TRUCK OR OTHER MANUAL MEANS. THE OWNER SHALL DISPOSE OF REMOVED SEDIMENT AND DEBRIS IN ACCORDANCE WITH THE RECYCLING AND DISPOSAL NOTES. REGULAR MAINTENANCE (AFTER EACH MEASURABLE RAINFALL EVENT 1.0 INCH OR GREATER OR A MINIMUM OF TWICE PER YEAR): • REMOVE ACCUMULATED SEDIMENT, TRASH, AND DEBRIS FROM THE FACILITY. • CLEAN OUT AND DISPOSE OF ACCUMULATED OIL, GREASE, AND SEDIMENTS. REMOVE ACCUMULATED TRASH AND DEBRIS. THE CLEAN OUT AND DISPOSAL TECHNIQUES SHOULD BE ENVIRONMENTALLY ACCEPTABLE AND IN ACCORDANCE WITH LOCAL REGULATIONS. SEDIMENT AND DEBRIS SHALL BE REMOVED FROM THE UNDERGROUND SWM FACILITY BY VACUUM TRUCK OR OTHER MANUAL MEANS. THE OWNER SHALL DISPOSE OF REMOVED SEDIMENT AND DEBRIS IN ACCORDANCE WITH THE RECYCLING AND DISPOSAL NOTES. DOCUMENTATION REQUIREMENTS: • PREPARE ANNUAL INSPECTION REPORTS AS REQUIRED BY THE MUNICIPAL ORDINANCE AND STORMWATER AGREEMENT. • PREPARE AND MAINTAIN INSPECTION, REPAIR, AND REPLACEMENT LOGS/REPORTS IN ACCORDANCE WITH PA DEP CHAPTER 102 REGULATIONS AND THE CONDITIONS OF THE NPDES PERMIT.
RAIN GARDEN / BIO-RETENTION PA DEP BMP 6.4.5 BMP-002 BMP-004 BMP-005 BMP-006 BMP-007 BMP-008 BMP-010 BMP-011 BMP-013 BMP-014 BMP-015	• AT ALL TIMES DURING CONSTRUCTION THE FACILITY SHALL BE PROTECTED FROM COMPACTION (WITHIN TWO FEET OF THE SUBGRADE OF THE FACILITY). • THE FACILITY MAY NOT RECEIVE RUNOFF UNTIL THE ENTIRE CONTRIBUTING DRAINAGE AREA TO FACILITY HAS RECEIVED FINAL STABILIZATION. • UPLAND TRIBUTARY CONVEYANCE FACILITIES SHALL BE FLUSHED AND SEDIMENT REMOVED. • CONTRACTOR SHALL PREVENT SEDIMENT LADEN RUNOFF FROM ENTERING THE FACILITY. • CONTRACTOR SHALL USE LOW-PRESSURE EQUIPMENT AND UTILIZE NON-INFILTRATION AREAS FOR EQUIPMENT STAGING TO PERFORM EXCAVATION AND INSTALLATION. • SEDIMENT LADEN OVERBURDEN AND DEPOSITION SHALL BE REMOVED FROM THE FACILITY TO PROVIDE A FREE DRAINING SUBGRADE. • CONTRACTOR TO TEST PIT FACILITY PRIOR TO INSTALLATION TO DETERMINE DEPTH TO LIMITING ZONE (BED ROCK OR WATER TABLE). • THE CONTRACTOR SHALL PROVIDE A MIN. OF 2 FEET OF SEPARATION BETWEEN THE BOTTOM OF THE FACILITY AND THE LIMITING ZONE IN ACCORDANCE WITH APPENDIX C OF THE PA DEP BMP MANUAL. • IF A MINIMUM OF 2 FT CANNOT BE PROVIDED TO BED ROCK THE CONTRACTOR SHALL PROVIDE AN ADDITIONAL 2' SOIL MANTLE BETWEEN THE FACILITY AND THE BED ROCK IN ACCORDANCE WITH THE RECOMMENDATION AND UNDER THE DIRECTION OF THE PROJECT GEO-TECHNICAL ENGINEER. • PLACEMENT OF THE SOIL MEDIA SHALL BE DONE IN TWO (2) LIFTS TO THE DEPTH SHOWN ON THE DETAIL. OVERFILLING IS RECOMMENDED TO ACCOUNT FOR SETTLEMENT. LIGHT HAND TAMPING IS ACCEPTABLE IF NECESSARY. • ON-SITE TOPSOIL FOR THE USE WITHIN THE AMENDED SOILS OF THE BMP FACILITY SHALL NOT BE PERMITTED UNLESS THE TOPSOIL IS TESTED AND CERTIFIED FOR USE WITHIN A BMP FACILITY (CLAY CONTENT, PERMEABILITY, ETC.) • PRESOAK THE PLANT

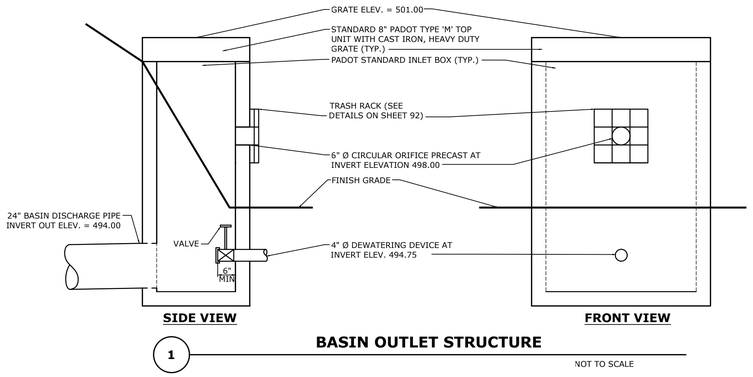

BASIN OUTLET STRUCTURE

1

NOT TO SCALE

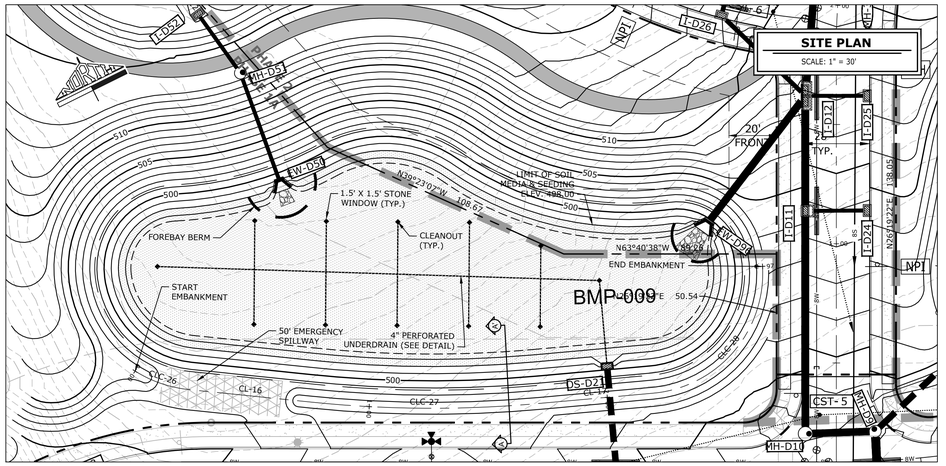

CENTERLINE LINE DATA			
SEGMENT	LENGTH	DIRECTION	STREET NAME
CL-16	51.37'	S57°48'54"E	BMP-009 BERM CENTERLINE
CL-17	48.36'	S68°48'40"E	BMP-009 BERM CENTERLINE

CENTERLINE CURVE DATA							
SEGMENT	RADIUS	LENGTH	TANGENT	CHORD DIRECTION	CHORD LENGTH	DELTA - Δ	STREET NAME
CLC-26	52.50'	24.04'	12.23'	S44°41'55"E	23.83'	26°13'59"	BMP-009 BERM CENTERLINE
CLC-27	497.50'	95.48'	47.89'	S63°18'47"E	95.33'	10°59'46"	BMP-009 BERM CENTERLINE
CLC-28	50.50'	77.68'	48.88'	N67°07'18"E	70.25'	88°08'04"	BMP-009 BERM CENTERLINE

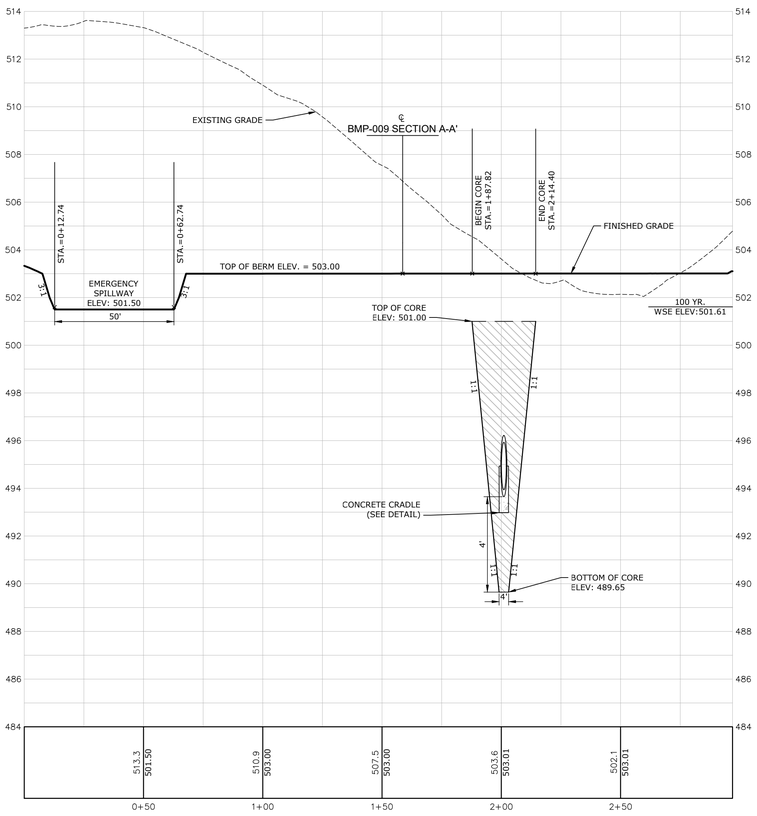

BMP-009 BERM CENTERLINE
HORZ. SCALE: 1"=30'
VERT. SCALE: 1"= 3'

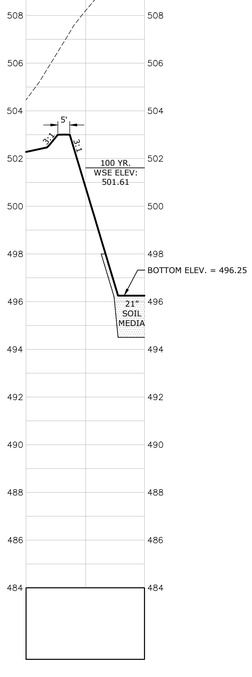

BMP-009 SECTION A-A'
HORZ. SCALE: 1"=30'
VERT. SCALE: 1"= 3'

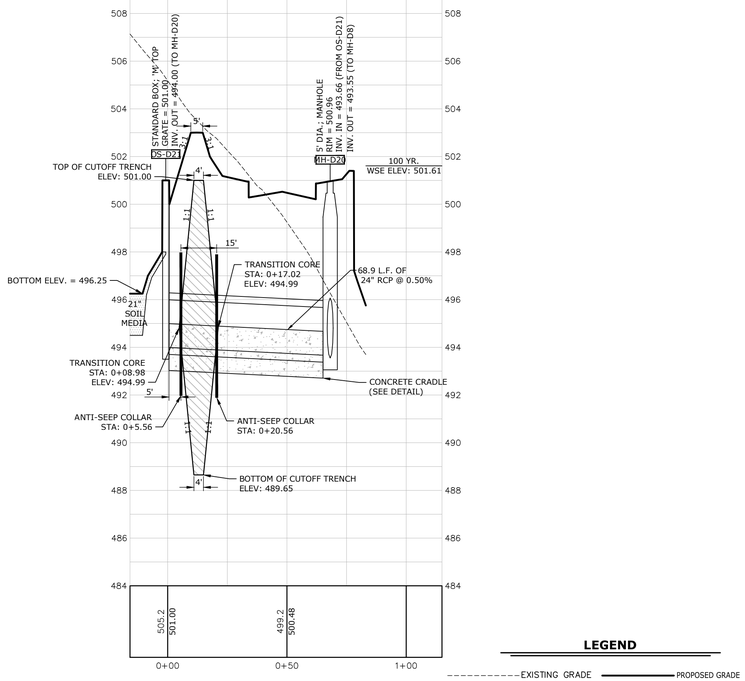

OS-D21 TO MH-D20
HORZ. SCALE: 1"=30'
VERT. SCALE: 1"= 3'

LEGEND

EXISTING GRADE — PROPOSED GRADE

NOT FOR BUILDING/NOT FOR CONSTRUCTION

NO	BY	DATE	REVISION

SEAL

SEAL

MANAGER: CHRIS VENARCHICK
DESIGN BY: OLH | CHECKED BY: CV
DRAWN BY: OLH | CHECKED BY: CV

SCALE: AS NOTED

CLIENT
1376 CAMPUS ROAD ASSOCIATES, LLC
ONE TOWER BRIDGE
100 FRONT STREET, SUITE 560
WEST CONSHOHOCKEN, PA 19428
(571) 276-3184

PROJECT TITLE
1376 CAMPUS ROAD - PHASE 2
FINAL SUBDIVISION & LAND DEVELOPMENT PLAN
MOUNT JOY TOWNSHIP | LANCASTER COUNTY, PA.

SHEET TITLE
BMP-009 PROFILES

Land Planning
Landscape Architecture
Civil Engineering
53 West James Street, Suite 101, Lancaster, PA 17603 (717) 715-1396 FAX (717) 435-8277
221 W. Philadelphia Street, Suite 108E, York, PA 17401 (717) 854-3745
320 N. Market Street, Suite 550W, Harrisburg, PA 17101 (717) 599-7615
E-mail: info@rgsassociates.com
www.rgsassociates.com

RGS ASSOCIATES

DATE: OCTOBER 24, 2024
PROJECT NO.: 2024J13-001

SHEET NO.: 34 OF 34

PLOTTED: Thursday, October 24, 2024 @ 09:12AM

FILENAME: P:\2024\2024J13-001\CADD\FINAL PH2\Plot\Z-Profiles-Basin.dwg XREFS: Existing;EG;Profiles-Utilities;Basin-Outlet-Structure;Layout;PG;Titleblock IMAGES:

November 21, 2024

LANCASTER CIVIL
★ ★ engineering company ★ ★
p.o. box 8972, lancaster, pa 17604-8972
www.lancastercivil.com

Kim Kaufman
Township Manager
Mount Joy Township
8853 Elizabethtown Road
Elizabethtown, PA 17022

Via email: kkaufman@mtjoytwp.org

Re: 1376 Campus Road
Final Subdivision and Land Development Plan – Phase 2
Township Permit No. 24-20-FLDP
LCEC Project No: 25-100

Dear Mr. Kaufman,

We have received a final subdivision and land development plan submission from RGS Associates Inc. for the above-referenced project. The submission consisted of the following documents:

- Submission cover letter dated October 24, 2024
- Final Subdivision and Land Development Plan (Phase 2) dated October 24, 2024
- Stormwater Management Report for NPDES Module 1 and 2 dated October 24, 2024
- Drainage Areas Maps dated October 24, 2024
- Opinion of Probable Cost (Phase 2 Shared/In Right-of-Way) dated October 24, 2024
- Opinion of Probable Cost (Phase 2 Single Family) dated October 24, 2024
- Campus Road Lighting Calculations dated August 8, 2024

Based upon my review of the submitted information, I offer the following comments for the Township to consider:

Subdivision and Land Development Ordinance

1. The Utility Plan (Sheet 19 of the plans) is illegible and there are numerous revisions required for the plan to be presented in a clear, legible, coherent and organized manner (119-31.A(4)).
2. The plans shall be signed and sealed by a registered engineer, surveyor or landscape architect (119-31.A(5)).
3. The recorded trail easement from the Phase 1B plan shall be noted on the plan (119-31.B(14)).
4. The total number of lots shall be corrected (119-31.D(3)).
5. All certificates shall be executed prior to final plan approval (119-35.E & 113-41.B).
6. Legal descriptions for easements to be dedicated to the Township, including but not limited to drainage easements, shall be provided (119-35.E(4)(a)).

7. Legal descriptions for the right-of-way proposed for dedication to Mount Joy Township shall be provided (119-35.E(4)(b)).
8. A Stormwater Management Agreement and Declaration of Easement in a form acceptable to the Township Solicitor shall be executed and recorded (119-35.E(4)(c), 119-56.E & 113-62).
9. A land development agreement in a form acceptable to the Township Solicitor shall be executed (119-35.E(4)(f)).
10. The construction cost estimate shall include costs for the bituminous pathway (119-41 & 113-60). It does not appear that the 6" Superpave Base Course line item is required for Phase 2.
11. Deeds to lots which contain clear sight triangles shall provide that no structure, landscaping or grading shall be erected, installed or performed within the area of the clear sight triangle which would obscure the vision of motorists (119-52.L).
12. A crosswalk detail shall be provided (119-53.(B)(8)).
13. The deed shall contain the requirement that nothing shall be placed, planted, set or put within an easement that would adversely affect the function of the easement or conflict with the easement agreement (119-56.B).
14. Recreational areas and facilities shall be provided (119-61). The minimum lot area which shall be dedicated is 1.458 acres (27 dwelling units x 0.054 acre per dwelling unit). The applicant has indicated the intent to provide a fee in lieu of dedicating park and open space. This fee (less the approved reduction for Phase 2) shall be computed and paid prior to approval of the final plan.
15. The width of the path shown in the Typical Bituminous Pathway Detail shall be dimensioned (119-62).

Stormwater Management Ordinance

16. Labels for Swale 7A and 7B shall be provided on the plans (113-37.C(5)).
17. The information shown in the Basin Outlet Structure construction detail on Sheet 31 is inconsistent with the BMP-009 information shown on Sheet 34 of the plans (113-43.J(5)).
18. The Dewatering Device Detail shown on Sheet 31 of the plans should be removed (since there is no dewatering device proposed in this phase) (113-43.J(5)).
19. The depth of amended soils (18") shown in the Underdrain Section Detail and Cleanout With Pea Gravel Window construction details is inconsistent with the depth of amended soils shown in the Bio-Retention Facility Standard Detail and the BMP-009 Section A-A' and OS-D21 to MH-D20 vertical profiles (113-43.J(5)).
20. BMP-009 should be included in the Operation and Maintenance Notes table shown on Sheet 33 of the plans (113-63.B).

Traffic

21. The proposed development is located within the Transportation Service Area established for the Mount Joy Township Traffic Impact Fee Ordinance. The developer is constructing the Campus Road roundabout in lieu of paying the Impact Fees in accordance with the terms and conditions set forth in the Agreement for Construction of Roundabout.

If you should have any questions or need additional information, please do not hesitate to contact me at bencraddock@lancastercivil.com or via telephone at 717-799-8599.

Sincerely,

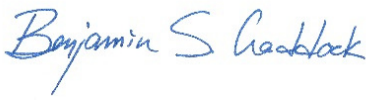

Benjamin S. Craddock, PE, President
LANCASTER CIVIL

cc: Justin Evans, AICP, Township Community Dev. Director/Zoning Officer (via email)
Patricia Bailey, Township Secretary (via email)
Josele Cleary, Esquire, Township Solicitor (via email)
Renee Addleman, Planner, LCPC (via email)
Christopher Lincoln, PE Traffic Planning & Design (via email)
Chris Venarchik, RLA, RGS Associates Inc. (via email)
Nick Grandi, RLA, RGS Associates Inc. (via email)
Andy Miller, PE, Catalyst Commercial Development, LLC (via email)